2025

For Your Home.
For Your Office.
For Your Life.

FORKS VALLEY WOODWORKING

BEAUTIFUL, DURABLE & VERSATILE

Each style in the Forks Valley collections is unique in its own way and each decorator has many styles from which to choose depending on the effect desired. When reviewing our offerings, please remember that the choice of woods... oak, cherry, brown maple, hickory or quartersawn white oak... enhances the versatility of each style so rustic pieces or more modern pieces can blend well with most any room decor.

TABLE OF CONTENTS

Occasionals..... 46

Media Stands, Cabinets & Consoles 80

Wall Units..... 102

Corner Media Consoles & Hutches 118

Bookcases & Stereo Cabinets.... 124

Home Office & Business Furnishings 142

Glass, Mullions & Hardware Options 194

Dimensional Details 197

Warranty ..... inside back cover

Forks Valley Woodworking respectfully reserves the right to make changes at any time to prices, materials, specifications, hardware, colors/finishes, models and to discontinue models without notice or obligation. Color reproductions are as close as photographic and print reproduction will allow. All woods and finishes show some degree of variation due to the natural characteristics of wood.

Fine furniture is only as good as the wood used to build it. At Forks Valley, we only accept the highest grade North American hardwoods, painstakingly selected for beauty, strength and straightness. Boards are cut to size, color-sorted and grain-matched before being bonded together with a permanent furniture glue to create extremely durable tops and sides for our furniture.

No automated assembly lines. No mass production. Our furniture is hand-constructed by experienced craftsmen specifically trained in Forks Valley manufacturing methods. We use specialized equipment to produce uniform raised panel doors and time-tested joinery methods – mortise & tenon, dovetail, mitered, tongue & groove – for solid quality through and through.

We plane and sand then sand again using a combination of careful machine and meticulous hand sanding. This attention to detail is vital to giving each piece a smooth, silky surface ready for application of the perfect custom finish.

Haste is never part of our process. There is no rushing a work of art destined to be a lasting reflection of your lifestyle and values. The final finish is trusted only to a master craftsman who skillfully applies the stain to ensure a smooth, even coat. In the last step of the manufacturing process, a protective varnish gives the piece a lustrous and tough surface that resists damage caused by normal use.

Before any Forks Valley furniture leaves our workshop, it undergoes a rigorous all-over inspection. If the smallest imperfection in wood, finish, mechanics or hardware is found, the problem is resolved and the piece goes through the entire inspection process once more. The final result is heirloom quality furniture, each piece unique and admired for generations to come.

© 2025 Forks Valley Woodworking

Artesa Collection

The elegantly rugged look of the Artesa style adds character to any room and fits as easily into a chic, modern condo as in a rustic log home. With arches, corbels and strongly tapered legs, Artesa furniture inspires compliments from all who see it.

Occasionals 48-49
Media Stands 82
Wall Units 104
Corner Media
Consoles / Hutches 120, 122
Bookcases 126, 136, 138
Home Office 144,146-151

Artesa

FVET-A
End Table

FVCS-A
Chair Side End Table

FVCT-A
Coffee Table

FVCT-A-LT
Lift-Top Coffee Table

FVST-A
Sofa Table

FVCT-38R-A
Round Coffee Table

FVCT-A-GT
Glass-Top Coffee Table

FVET-A-DWR
End Table w/Drawer

FVCT-A-DWR
Coffee Table w/Drawer

FVST-A-DWR
Sofa Table w/Drawers

FVE-26-A
Media Stand

FVE-10-A
Media Stand

FVE-060-A-BP
Media Stand

FVE-3672-A-FP
Media Stand with fireplace

FVE-3060-A
Corner Media Console

FVE-053-A-BP
Corner Media Console

FVE-193-A
3-Piece Wall Unit

FVE-191-A
Wall Unit (Center Unit Only)

FVE-053-A
2-Piece Corner Media Console w/Hutch

Artesa

FVB-011-A-6ft
72" Bookcase

FVB-010-A
80" Bookcase

FVB-5466-A
66" Bookcase

FVBR-4DR-A
Barrister Bookcase

FVB-012-A-6ft
72" Double Bookcase

FVD-2849-A
Desk

FVD-2654-A
Writer's Desk

FVD-3365-A
Curved Top Desk (only)
finished back

FVD-7878L-A
L Desk
2-piece desk base

FVD-2865-HT-A
2-Piece Desk & Hutch Top

FVL-2144-A
Lateral File Credenza

FVF-2DWR-A
2-Drawer File Cabinet
unfinished back

FVLC-063-A
Lateral File
Credenza

FVD-2865-A
Desk (only)
unfinished
back

FVD-7872L-A
L Desk

FVD-3371-A-S/S
Sit-to-Stand Desk
finished back

FVD-7878L-HT-A
L Desk
3-piece desk base & hutch

FVBB-2590-A
Backbar (1-piece base)

FVF-2DWR-A-F
2-Drawer File Cabinet
finished back

FVBB-2590-HT-A
Backbar
4-piece base & hutch

FVL-2144-HT-A
2-piece Lateral File Credenza
with bookcase

Boulder Creek
Collection

Gently curved legs, black wood inlays, and arched skirts distinguish the Boulder Creek collection. This contemporary look adds a touch of warmth and classic style to any entertainment or living room. Hand made by skilled Amish craftsmen, Boulder Creek furniture is available in a choice of sustainably harvested hardwoods.

Occasionals 50-51
Media Stands 83-84
Wall Units 105
Corner Media
Consoles / Hutches 120,122
Bookcases 127,136,138
Home Office 144,152-160

Boulder Creek

FVCT-BC
Coffee table w/Drawer

FVET-22R-BC
Round End Table

FVCT-38R-BC
Round Coffee Table

FVET-BC
End Table

FVWT-BC
Wedge Table

FVCT-BC-LT
Lift-Top Coffee Table

FVCT-BC-EN
Enclosed Coffee Table

FVST-BC-EN
Enclosed Sofa Table

FVET-BC-EN
Enclosed End Table

FVCS-BC
Chair Side End Table

FVCT-BC-EN-LT
Enclosed Lift-top Coffee Table

FVST-BC
Sofa Table

FVE-032-BC-BP
Media Stand

FVE-060-BC36
Media Stand

FVE-048-BC
Media Stand

FVE-060-BC-BP
Media Stand

FVE-25-BC
Media Stand

FVE-072-BC-BP
Media Stand

FVE-26-BC
Media Stand

FVE-41-BC
Media Stand

FVE-049-BC
6-Piece Wall Unit with Adj. Bridge

FVE-2956-BC
Corner Media Console

FVE-053-BC-BP
Corner Media Console

FVE-053-BC
2-Piece Corner Media Console
with Hutch

Boulder Creek

FVB-011-BC-6ft
72" Bookcase

FVB-010-BC
80" Bookcase

FVB-011-BC-5ft
60" Bookcase

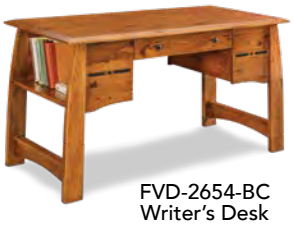

FVD-2654-BC
Writer's Desk

FVD-420-BC
Writer's Desk

FVBR-4DR-BC
Barrister Bookcase

FVB-012-BC-6ft
Double Bookcase

FVD-3371-BC-S/S
Sit-to-Stand Desk

FVD-2849-BC
Desk
FVDH-600-BC
Hutch

FVD-7882L-BC-S/S
Sit-to-Stand L Desk

Boulder Creek

FVD-2865-DT-BC
2-piece Desk & Topper

FVF-2DWR-BC-F
2-Drawer File Cabinet
finished back

FVF-2DWR-BC
2-Drawer File Cabinet
unfinished back

FVD-3365-BC
Desk (only)
finished back

FVD-7878L-BC
L Desk
2-piece desk base

FVD-6660L-BC
2-piece L Desk

FVLC-063-BC
Lateral File Credenza

FVD-7878L-HT-BC
L Desk
3-piece desk base & hutch

FVD-7872L-BC
2-piece L Desk

FVD-2865-BC
Desk (only)
unfinished
back

FVD-2865-HT-BC
2-Piece Base & Hutch Top

FVBB-2590-HT-BC
Backbar
4-pc. base & hutch

FVBB-2590-BC
Backbar 1-piece base

FVL-2144-BC
Lateral File Credenza

FVL-2144-HT-BC
2-piece Lateral File Credenza
with bookcase

Bridger Mission Collection

Versatile arts & crafts styling with flowing corbels accenting simple lines.

Bookcases 128,139
Home Office 161

Bridger Mission

FVB-010-BM
Bookcase

FVB-011-BM-5ft
Bookcase

FVB-011-BM-4ft
Bookcase

FVB-012-BM-6ft
Double Bookcase

FVD-3049-BM
Desk

FVD-3065-BM
Desk

Carlisle Collection

Conservatively avant garde with raised door inserts and softly splayed legs.

Occasionals 52-53
Media Stands 85

FVCS-CR
Chair Side End Table

FVET-CR
End Table

FVCT-CR
Coffee Table

FVCT-CR-LT
Lift-Top Coffee Table

FVST-CR
Sofa Table

FVCT-CR-EN
Enclosed Coffee Table

FVCT-CR-EN-LT
Enclosed Lift-Top Coffee Table

FVST-CR-EN
Enclosed Sofa Table

FVET-CR-EN
Enclosed End Table

FVE-3263-CR
Media Stand

FVE-072-CR
Media Stand

Centennial
Collection

Arts and crafts mission characteristics are accented by the rich grains of any of four popular hardwoods. In all Centennial pieces, storage is a key feature. Imagine the artful presence of this collection in any room where family and friends gather.

Occasionals 54-55
Media Stands / Entertainment Center 86, 100
Corner Media Consoles.....120
Home Office 162

Centennial

FVET-CN
End Table

FVCS-CN
Chair Side End Table

FVCT-CN
Coffee Table w/Drawer

FVCT-CN-LT
Lift-Top Coffee Table

FVST-CN
Sofa Table

FVCT-CN-EN-LT
Enclosed Lift-Top Coffee Table

FVCT-CN-EN
Enclosed Coffee Table

FVST-CN-EN
Enclosed Sofa Table

FVET-CN-EN
Enclosed End Table

FVE-032-CN-BP 36
Media Stand

FVE-031-CN
Media Stand

FVE-032-CN-BP
Media Stand

FVE-072-CN-BP
Media Stand

FVE-05-CN
Media Entertainment Center

FVD-7272L-HT-CN
L Desk
3-piece desk base & hutch

FVE-2956-CN
Corner Media Console

FVD-7272L-CN
L Desk
2-piece desk base

Colbran
Collection

Colbran's tapered sides and exposed tenons provide it a unique blend of contemporary and traditional Mission styling. Its strength and durability make it a family-friendly choice that will be used and treasured for decades.

Occasionals 56-57
Media Stands 87
Wall Units 106
Bookcases 136
Home Office 163-164

Colbran

FVET-CB
End Table

FVCT-CB
Coffee Table

FVCT-CB-LT
Lift-Top Coffee Table

FVST-CB
Sofa Table

FVET-CB-EN
Enclosed End Table

FVCT-CB-EN
Enclosed Coffee Table

FVCT-CB-EN-LT
Enclosed Lift-Top Coffee Table

FVST-CB-EN
Enclosed Sofa Table

FVE-032-CB-BP
Media Stand

FVE-031-CB
Media Stand

FVE-072-CB-BP
Media Stand

FVE-193-CB
4-Piece Wall Unit

FVE-191-CB
2-Piece Wall Unit

FVBR-4DR-CB
Barrister Bookcase

FVD-2865-CB
Desk
unfinished back

FVD-3365-CB
Desk
finished back

FVD-2849-CB
Desk
unfinished back

FVF-2DWR-CB
2 Drawer
File Cabinet
unfinished back

FVF-2DWR-CB-F
2 Drawer
File Cabinet
finished back

Classic Collection

Raw hardwood's natural beauty transformed by artisans into treasured heirlooms.

Media Stands 87
Corner Media Consoles..... 121
Stereo Cabinets..... 141

FVE-024-C-XL
Media Stand
w/Optional Swivel

FVE-033-C
Corner Media Console

FVE-026-C
Stereo Cabinet

Craftsman Collection

Frank Lloyd Wright influences like leaded glass and mortise & tenon accents create environmental tranquility.

Bookcases..... 137
Home Office..... 144,165

FVD-3065-CM
Writer's Desk

FVBR-4DR-CM
Barrister Bookcase

FVD-2654-CM
Writer's Desk (no lift)

FVD-2654-CM-S/S
Electric Sit-to-Stand Writer's Desk

Dover Collection

Understated elegance is the hallmark of the Dover collection. Raised-look panels, radiused corners and tapered legs are just a few details that enhance the sleek, mid-century modern design of this popular style. For cozy family togetherness or hosting your most discerning guests, Dover furniture is at home in any space.

Occasionals 58
Media Stands 88
Bookcases 129
Home Office 166-168

DOVER

FVCS-D
Chair Side End Table

FVET-D
End Table

FVST-D
Sofa Table

FVCT-D
Coffee Table

FVE-10-D
Media Stand

FVE-26-D
Media Stand

FVB-011-D-5ft
Bookcase

FVB-011-D-6ft
Bookcase

FVB-010-D
Bookcase

FVD-2849-D
Desk

FVD-2865-D
Desk

FVD-3065-D
Desk
finished back

FVLC-675-D
Lateral File Credenza

FVD-515-D
Desk Base

FVD-515-D
Desk Base
FVDH-620-D
Desk Hutch

Ensenada Collection

Ensenada's artistic profile adds an elegantly casual air to any room, inviting guests to enjoy the surroundings you've created and inspiring plenty of well-deserved compliments.

Occasionals 59-60
Media Stands 89
Wall Units 107-108
Bookcases 130, 139
Home Office 169-172

Ensenada

FVCS-EN
Chair Side
End Table

FVWT-EN
Wedge Table

FVET-EN
End Table

FVET-22R-EN
Round End Table

FVCT-38R-EN
Round Coffee Table

FVCT-EN
Coffee Table with Drawer

FVCT-EN-LT
Lift-Top Coffee Table

FVST-EN
Sofa Table

FVET-EN-EN
Enclosed End Table

FVCT-EN-EN
Enclosed Coffee Table

FVST-EN-EN
Enclosed Sofa Table

FVCT-EN-EN- LT
Enclosed Lift-Top Coffee Table

FVE-3463-EN
Media Stand

FVE-3463-EN-FP
Media Stand with fireplace

FVE-072-EN
Media Stand

FVE-26-EN
Media Stand

FVE-40-EN
Media Stand

FVE-058-EN
6-Piece Wall Unit with Adj. Bridge

FVE-85110-EN
6-Piece Wall Unit

FVE-36110-EN
3-Piece Wall Unit

Ensenada

FVB-010-EN
80" Bookcase

FVB-011-EN-6ft
72" Bookcase

FVB-5466-EN
66" Bookcase

FVB-012-EN 6ft
Double Bookcase

FVD-3365-EN
Desk
finished back

FVD-2865-EN
Desk
unfinished back

FVD-2654-EN
Writer's Desk

FVD-6660L-EN
L Desk
2-piece desk base

FVD-2849-EN
Desk
unfinished back

FVD-7878L-EN
L Desk
2-piece
desk base

FVD-7878L-HT-EN
L Desk
3-piece desk base
& hutch

FVL-2144-EN
Lateral File Credenza

FVF-2DWR-EN
2 Drawer File Cabinet
unfinished back

FVF-2DWR-EN-F
2 Drawer File Cabinet
finished back

FVLC-063-EN
Lateral File Credenza

FINLAND Collection

Occasionals 61
Media Stands 90

Gracefully demure in style with gentle arches and clean, flowing lines.

FVET-FL-EN
Enclosed End Table

FVET-FL
End Table

FVCT-FL
Coffee Table w/Drawer

FVST-FL
Sofa Table

FVST-FL-EN
Enclosed Sofa Table

FVE-3463-FL
Media Stand

FVE-072-FL
Media Stand

Hoosier Heritage Collection

Traditionally timeless decorative feet and inset door arches create a sturdy classic look.

Wall Units 109
Bookcases 131, 140

FVE-049-HH
6-Piece Wall Unit
w/Adj. Bridge

FVB-012-HH-6ft
1-Piece Double Bookcase

FVB-010-HH
Bookcase

FVB-011-HH-5ft
Bookcase

FVB-011-HH-4ft
Bookcase

Grant Collection

Charmingly warm, solidly built Craftsman furniture with authentically duplicated lines and hardware.

FVD-2654-GR-S/S
Electric Sit-to-Stand Desk

FVD-2865-HT-GR
2-Piece Desk & Hutch

FVD-2865-GR
Desk
unfinished back

FVD-3365-GR
Desk
finished back

FVLC-063-GR
Lateral File Credenza

FVD-2849-GR
Desk; unfinished back

FVD-7878L-HT-GR
L Desk
3-piece desk base & hutch

FVD-7878L-GR
L Desk
2-piece desk base

FVF-2DWR-GR-F
2 Drawer File Cabinet
finished back

FVF-2DWR-GR
2 Drawer File Cabinet
unfinished back

HOUSTON
Collection

Metal barn door slides, distressed wood with rough sawn scars and natural marks of aging, antiqued pulls and planked doors give Houston the kind of warm character that says to your family and guests, "Sit down, relax, enjoy your stay."

Occasionals 62-63
Media Stands 91
Bookcases 132
Home Office 145,176-178

HOUSTON

same look in smooth finish – see **Timbra** collection pgs 42-43

FVET-HT
End Table w/Drawer

FVCS-HT
Chair Side
End Table

FVWT-HT
Wedge Table

FVCT-HT
Coffee Table w/Drawer

FVST-HT
Sofa Table w/Drawer

FVET-S/W-HT
End Table

FVET-22RS/W-HT
Round End Table

FVCT-38RS/W-HT
Round Coffee Table

FVST-S/W-HT
Sofa Table

FVE-26-HT
Media Stand

FVE-3160-HT
Media Stand

FVE-40-HT
Media Stand

FVE-3172-HT
Media Stand

FVE-3172-HT-FP
Media Stand with fireplace

HOUSTON

same look in smooth finish – see **Timbra** collection pgs 42-43

FVLC-675-HT
Lateral File Credenza

FVB-011-HT-5ft
Bookcase

FVB-011-HT-6ft
Bookcase

FVB-010-HT
Bookcase

FVD-535-HT
Desk
FVDH-621-HT
Hutch

FVD-535-HT
Desk

FVD-2865-HT
Desk

FVD-3365-HT
Desk

Kascade Collection

The Kascade Collection is identified by an applied slat side design cohesive with its Mission styling. This grouping subtly reflects the taste of its quality-conscious owner while creating an atmosphere of warm welcoming.

Occasionals 64-65
Media Stands 92
Home Office 179-181

Kascade

FVET-KS
End Table w/Drawer

FVCT-KS
Coffee Table w/Drawer

FVCT-KS-LT
Lift-Top Coffee Table

FVST-KS
Sofa Table w/Drawer

FVET-KS-EN
Enclosed End Table

FVCT-KS-EN
Enclosed Coffee Table

FVCT-KS-EN-LT
Enclosed Lift-Top Coffee Table

FVST-KS-EN
Enclosed Sofa Table

FVE-3663-KS-BP
Media Stand

FVE-072-KS-BP
Media Stand

FVE-060-KS-BP
Media Stand

FVD-3365-KS
Desk
finished back

FVF-2DWR-KS-F
2-Drawer File Cabinet
finished back

FVF-2DWR-KS
2-Drawer File Cabinet
unfinished back

FVD-2865-DT-KS
2-Piece Desk

FVD-2849-KS
Desk

FVLC-063-KS
Lateral File Credenza

FVD-2865-KS
Desk
unfinished back

Lexington Collection

Visually captivating bevels, insets and applied architectural elements showcase woodworking skills.

Occasionals 68
Media Stands 93

FVET-LX
End Table w/Drawer

FVCT-LX
Coffee Table w/Drawer

FVST-LX
Sofa Table w/Drawer

FVET-LX-EN
Enclosed End Table

FVST-LX-EN
Enclosed Sofa Table

FVE-072-LX
Media Stand

FVE-3163-LX
Media Stand

LEXINGTON ARC
Collection

Showcasing skilled Midwestern workmanship, contemporary standard hardware and Arts & Crafts-inspired leaded glass, Lexington Arc furniture adds stunning visual appeal to your favorite space. Your visitors will notice the unique details and admire your good taste.

Occasionals 66-67
Media Stands 94
Bookcases 137
Home Office 182-184

LEXINGTON ARC

FVCS-LA
Chair Side End Table

FVET-LA
End Table

FVCT-LA
Coffee Table

FVST-LA
Sofa Table

FVCT-LA-LT
Lift-Top Coffee Table

FVET-LA-EN
Enclosed End Table

FVST-LA-EN
Enclosed Sofa Table

FVET-2424TWLR-LA
Round End Table

FVCT-3820TWLR-LA
Round Coffee Table

FVET-22R-LA
Round End Table

FVCT-38R-LA
Round Coffee Table

FVE-41-LA
Media Stand

FVE-25-LA
Media Stand

FVE-26-LA
Media Stand

FVE-3163-LA
Media Stand

FVE-072-LA
Media Stand

LEXINGTON ARC

FVBR-4DR-LA
Barrister Bookcase

FVD-3065-LA
Desk
finished back

FVD-2865-LA
Desk
unfinished back

FVD-2849-LA
Desk
unfinished back

FVL-2144-LA
Lateral File Credenza

FVD-3365-LA
Desk
finished back

FVF-2DWR-LA
2-Drawer File Cabinet
unfinished back

FVF-2DWR-LA-F
2-Drawer File Cabinet
finished back

FVD-7878L-LA
L Desk
2-piece desk base

FVLC-063-LA
Lateral File Credenza

FVD-7878L-HT-LA
L Desk
3-piece desk base & hutch

MANHATTAN MISSION Collection

Eclectically modern with dentil molding and geometric design details.

Wall Units 110-111

FVE-193-MM
3-Piece Wall Unit

FVE-191-MM
1-Piece Wall Unit

FVE-049-MM
6-Piece Wall Unit w/Adj. Bridge

Marina
Collection

Sleek and chic with vibes of the beach... in any living room, Marina occasional furniture fills your space with invitations of casual relaxation and mellow moods even if the nearest lake or ocean is miles away.

Occasionals 69
Media Stands 95
Bookcases 133
Home Office 185-186

Marina

FVCS-MA
Chair Side End Table

FVET-MA
End Table

FVCT-MA
Coffee Table

FVE-3463-MA
Media Stand

FVST-MA-EN
Enclosed
Sofa Table

FVE-072-MA
Media Stand

FVB-010-MA
Bookcase

FVB-011-MA-6ft
Bookcase

FVLC-063-MA
Lateral File Credenza

FVD-2858-MA
Desk with
finished back

FVD-7878L-MA
L Desk
2-piece desk base

FVD-7878L-HT-MA
L Desk
3-piece desk base & hutch

Modesto
Collection

Blocky tapered legs give the Modesto style an authoritative stance, while exposed joinery and tenons honor its old world roots. Flush inset doors and drawers create a simple, clean, look that allows Modesto furniture to meld with and complement any surroundings.

Occasionals 70-71
Media Stands 96
Wall Units 112-113
Corner Media Consoles..... 123
Bookcases 134,137,140

Modesto

FVCS-MD
Chair Side
End Table

FVET-MD
End Table

FVCT-MD
Coffee Table w/Drawer

FVCT-MD-LT
Lift-Top Coffee Table

FVST-MD
Sofa Table

FVET-MD-EN
Enclosed End Table

FVCT-MD-EN
Enclosed Coffee Table

FVCT-MD-EN-LT
Lift-Top Enclosed Coffee Table

FVST-MD-EN
Enclosed Sofa Table

FVE-032-MD-BP36"
Media Stand

FVE-032-MD-BP
Media Stand

FVE-072-MD-BP
Media Stand

FVE-053-MD-BP
Corner Media Console

FVE-049-MD
6-Piece Wall Unit w/Adj. Bridge

FVE-051-MD
6-Piece Wall Unit w/Adj. Bridge
& Angled Side Cabinets

FVE-053-MD
2-Piece Corner Media
Console w/Hutch

FVBR-4DR-MD
Barrister Bookcase

FVB-010-MD
Bookcase

FVB-011-MD-6ft
Bookcase

FVB-5466-MD
Bookcase

FVB-012-MD-6ft
Double Bookcase (1-Piece Unit)

Old Classic Sleigh Collection

The Old Classic Sleigh style is characterized by rolling shapes and graceful curves on the front with flush-fit drawers and doors. It boldly states its presence in any room it occupies while surrounding its guests with warm acceptance.

Occasionals 72-73
Media Stands 97
Wall Units 114
Corner Media Consoles.....123
Bookcases 135,141

Old Classic Sleigh

FVET-OCS
End Table

FVCT-OCS
Coffee Table w/Drawer

FVCT-OCS-LT
Lift-Top Coffee Table

FVST-OCS
Sofa Table w/Optional Shelf

FVET-OCS-EN
Enclosed End Table

FVCT-OCS-EN
Enclosed Coffee Table

FVST-OCS-EN
Enclosed Sofa Table

FVE-043-OCS-BP
Media Stand

FVE-072-OCS-BP
Media Stand

FVE-058-OCS
6-Piece Wall Unit w/Adj. Bridge

FVE-053-OCS
2-Piece Corner Media Console w/Hutch

FVE-053-OCS-BP
Corner Media Console

FVB-011-OCS-5ft
Bookcase

FVB-011-OCS-6ft
Bookcase

FVB-010-OCS
Bookcase

FVE-026-OCS
Stereo Cabinet

SARATOGA
Collection

Its distinctive curves, deep beveled edges and skillfully routed accents will initially draw your attention, but look closer…there are so many more treasures to be discovered. Saratoga is the perfect blend of modern chic and old world craftsmanship.

Occasionals 74
Media Stands 97
Home Office 145,187-189

SARATOGA

FVET-24R-ST
Round End Table

FVCT-38R-ST
Coffee Table

FVST-ST
Sofa Table

FVE-3474-ST
Media Stand

FVD-2654-ST
Writer's Desk

FVD-3068-ST
Desk
finished back

FVD-3367-ST
Desk
finished back

FVBB-2074-HT-ST
2-Piece Back Bar & Hutch Top

FVBB-2074-ST
Back Bar
base only

Sierra Collection

Pronounced bowed legs gracefully ground each Sierra piece and flow upward to solid hardwood tops with chamfered edges. This versatile style blends well with any décor, yet stands out with its beautifully artistic elegance.

Occasionals 75
Media Stands 97

PARIS Collection

Home office 145,190

FVD-430-PR
Electric Sit-to-Stand
Writer's Desk

Sierra

FVET-22R-SR
Round End Table

FVET-24R-SR
Round End Table

FVCT-38R-SR
Coffee Table

FVCT-38RGT-SR
Glass-Top Coffee Table

FVST-SR
Sofa Table

FVET-SR
End Table

FVE-3463-SR
Media Stand

TIMBRA
Collection

If you want your furniture to show your warm hospitality, the rustic charm of Timbra offers a friendly "Welcome to our home" to all who enter. Whether its surroundings are contemporary, traditional or industrial, it's right at home.

Occasionals 76-77
Media Stands.....98
Wall Units 115-116
Home Office 190

TIMBRA

same look in rough sawn brown maple – see **Houston** collection pgs 22-24

FVET-TB
End Table

FVCS-TB
Chair Side
End Table

FVCT-TB
Coffee Table

FVST-TB
Sofa Table

FVET-TB-LET
End Table
with live edge top

FVCS-TB-LET
Chair Side End Table
with live edge top

FVCT-TB-LET
Coffee Table
with live edge top

FVST-TB-LET
Sofa Table
with live edge top

FVCT-TB-OWE
Coffee Table
with Ocean Wave Edge

FVE-3160-TB
Media Stand

FVE-3160-TB-LET
Media Stand
with live edge top

FVE-3172-TB
Media Stand

FVD-3365-TB-LET
Desk with finished back
and live edge top

FVE-36110-TB
3pc Base Unit

FVE-85130-TB
Wall Unit

FVE-85110-TB
Wall Unit

Victorian Collection

Romantic revival showcasing fluted columns with bullseye detail and leaded glass.

Wall Units 117
Home Office 191-193

FVE-193-VS
3-Piece Wall Unit

FVE-191-VS
Center Only

FVD-2865-VS
Desk
with unfinished back

FVD-3365-VS
Desk with finished back

FVD-7878L-HT-VS
3pc desk base & hutch

FVD-7878L-VS
L Desk
2-piece desk base

FVD-9678U-HT-VS
4-Piece Desk

West Lake Collection

Symmetrically pleasing with elements like rope trim, inset drawer fronts, and soft curves.

Occasionals 78-79
Media Stands 99

FVET-WL
End Table w/Drawer

FVST-WL
Sofa Table w/Drawer

FVCT-WL-LT
Lift-Top Coffee Table

FVCS-WL
Chair Side End Table

FVET-WL-EN
Enclosed End Table

FVST-WL-EN
Enclosed Sofa Table

FVCT-WL
Coffee Table w/Drawer

FVE-032-WL-BP
Media Stand

FVE-031-WL
Media Stand

FORKS VALLEY WOODWORKING

Better Because . . .

STANDARDS FOR OCCASIONALS

⅝" thick dovetailed, full extension, 3¼" deep functional drawers on occasional pieces

Soft close (concealed hinge) doors

Leg levelers on all legs for easy in home leveling

Solid hardwood sides and tops on enclosed occasional pieces

Fully adjustable shelf in enclosed sofa tables

Lift-top coffee tables offer 3¼" deep recessed storage area under tops and counter weight balance.

OPTIONS FOR OCCASIONALS

Change standard top to 1¼" thick Live Edge top on any occasional; add code **LET** after standard product code.

Change standard top to Ocean Wave Edge top on any occasional; add code **OWE** after standard product code.

Security tray (9"w x 13"d x 2⅛"h) on any open end table, keeps standard drawer; add **SCTY** after standard product code. Lock for top also available (must specify).

Solid adjustable shelf in open sofa tables

Power station on any occasional piece, in back, underneath top **PB2-2U**

Occasionals

From a tasteful accent table to an eye-catching storage solution or display table, Forks Valley has handcrafted the perfect occasional for every space and style...from rustic, to Arts & Crafts, to chic and modern. With so many wood and finish options, each table becomes a customized masterpiece.

Artesa Occasionals

Standard Features

A	B	C	D	E	F	
•	•	•	•	•	•	1" Solid top
•	•	•	•	•	•	Solid, 4-sided tapered legs
				•		Recessed storage under top with counter weight
					•	Beveled, tempered glass top

Optional Features

A	B	C	D	E	F	
•	•					5" Wider, 5" Deeper, or 2" Higher
•						30" Square
			•			32", 38", 42", or 48" Square

QS White Oak · Michael's Cherry

C

FVST-A · sofa table
54" W x 17¾" D x 30¼" H

QS White Oak · Michael's Cherry

D

FVCT-A · coffee table
42" W x 24" D x 20" H

Rustic Cherry · Michael's Cherry

A

FVET-A · end table
22" W x 24" D x 24" H

Rustic Cherry · Michael's Cherry

E

FVCT-A-LT · lift-top coffee table
42" W x 24" D x 20" H · (top up 29¼" H)

Rustic Cherry · Michael's Cherry

B

FVCS-A
chair side end table
14" W x 24" D x 24" H

Cherry · Michael's Cherry

F

FVCT-A-GT
glass top coffee table
42" W x 24" D x 20" H

Artesa Occasionals

Standard Features

A	B	C	D	
•	•	•	•	1" Solid top
•	•	•	•	Solid, 4-sided tapered legs
•		•	•	Full extension drawers
•		•	•	Hardware = Wrought Iron drawer pull **P-2** (shown)

Optional Features

A	B	C	D	
•		•	•	Blum, soft close undermount drawers
•				5" Wider, 5" Deeper, or 2" Higher
		•		32", 38", 42", or 48" Square

Rustic Cherry · Michael's Cherry

A

FVET-A-DWR
end table w/drawer
22" W x 24" D x 24" H

Rustic Cherry · Michael's Cherry

B

FVCT-38R-A
round coffee table
38" Round x 20" H

Rustic Cherry · Michael's Cherry

C

FVCT-A-DWR · coffee table w/drawer
42" W x 24" D x 20" H

Rustic Cherry · Michael's Cherry

D

FVST-A-DWR
sofa table w/drawers
54" W x 17¾" D x 30¼" H

Boulder Creek
Occasionals

Standard Features

A	B	C	D	E	F	G	
●	●	●	●	●	●	●	1" Solid top
	●		●				Full extension drawers
				●			Recessed storage under top with counter weight
	●		●				Hardware = 1" Black knob **U**

Optional Features

A	B	C	D	E	F	G	
●	●	●	●	●			Omit inlays (no up charge)
	●	●					5" Wider, 5" Deeper, or 2" Higher
	●						30" Square (no drawer)
			●				32", 38", 42", or 48" Square
	●		●				Blum, soft close undermount drawers
	●		●				Hardware = **O-1** (no up charge)

B

FVET-BC
end table
19½" W x 25" D x 24" H

C

FVCS-BC
chair side end table
14" W x 25" D x 24" H

D

FVCT-BC · coffee table
44" W x 25" D x 20" H

E

FVCT-BC-LT · lift-top coffee table
44" W x 25" D x 20" H · (top up 29¼" H)

A

FVWT-BC · wedge table
front: 14" W, back: 22" W
25" D x 24" H

F

FVET-22R-BC
round end table
22" Round x 24" H

G

FVCT-38R-BC
round coffee table
38" Round x 20" H

Boulder Creek
Occasionals

Standard Features

A	B	C	D	E	
•	•	•	•	•	1" Solid top
•	•			•	Full extension drawers
•		•	•	•	Soft close (concealed hinge) doors
				•	Adj. shelf behind doors
•	•	•	•	•	Hardware = 1" Black knob **U**

Optional Features

A	B	C	D	E	
•	•	•	•	•	Omit inlays (no up charge)
•					5" Wider, 5" Deeper, or 2" Higher
		•			32", 38", 42", or 48" Square
•	•	•	•	•	Hardware = **O-1** (no up charge)

QS White Oak · Golden Brown

A

FVET-BC-EN
enclosed end table
19½" W x 25" D x 24" H

Cherry · CF-811 Cherry

B

FVST-BC
sofa table
44" W x 17¼" D x 29" H

QS White Oak · Golden Brown

C

FVCT-BC-EN · enclosed coffee table
44" W x 25" D x 20" H

QS White Oak · Golden Brown

D

FVCT-BC-EN-LT
enclosed lift-top coffee table
44" W x 25" D x 20" H · (top up 29¼" H)

QS White Oak · Golden Brown

E

FVST-BC-EN · enclosed sofa table
44" W x 15" D x 29" H

Carlisle
Occasionals

Standard Features

A	B	C	D	E	
●	●	●	●	●	1" Solid top
●		●		●	Full-extension drawers
			●		Recessed storage under top with counter weight
●		●		●	Hardware = 1¼" Round Wood knob **A-1** (shown)

Optional Features

A	B	C	D	E	
●		●		●	Blum, soft close undermount drawers
●	●				5" Wider, 5" Deeper, or 2" Higher
●					30" Square (no drawer)
		●			32", 38", 42", or 48" Square

Sap Cherry · Vintage Antique

B

FVCS-CR
chair side end table
14" W x 24" D x 24" H

QS White Oak · Michael's Cherry

C

FVCT-CR · coffee table
42" W x 24" D x 20" H

Brown Maple · Chocolate Spice

D

FVCT-CR-LT · lift-top coffee table
42" W x 24" D x 20" H · (top up 29¼" H)

QS White Oak · Michael's Cherry

A

FVET-CR · end table
17½" W x 24" D x 24" H

QS White Oak · Michael's Cherry

E

FVST-CR · sofa table
42" W x 17" D x 29½" H

Carlisle
Occasionals

Standard Features

A	B	C	D	
•	•	•	•	1" Solid top
•	•	•	•	Soft close (concealed hinge) doors
•			•	Full-extension drawers
			•	Adj. shelf behind doors
•	•	•	•	Hardware = 1¼" Round Wood knob **A-1** (shown)

Optional Features

A	B	C	D	
•				5" Wider, 5" Deeper, or 2" Higher
	•			32", 38", 42", or 48" Square

QS White Oak · Michael's Cherry

B

FVCT-CR-EN
enclosed coffee table
42" W x 24" D x 20" H

QS White Oak · Michael's Cherry

C

FVCT-CR-EN-LT
enclosed lift-top coffee table
42" W x 24" D x 20" H · (top up 29¼" H)

QS White Oak · Michael's Cherry

A

FVET-CR-EN
enclosed end table
17½" W x 24" D x 24" H

QS White Oak · Michael's Cherry

D

FVST-CR-EN · enclosed sofa table
42" W x 14¾" D x 29½" H

Centennial Occasionals

Standard Features

A	B	C	D	E	
•	•	•	•	•	1" Solid top
•		•		•	Full-extension drawers
			•		Recessed storage under top with counter weight
•		•		•	Hardware = 1" Black Square knob **R** (shown)

Optional Features

A	B	C	D	E	
•		•		•	Blum, soft close undermount drawers
•	•				5" Wider, 5" Deeper, or 2" Higher
•					30" Square (no drawer)
		•			32", 38", 42", or 48" Square

Oak · Vintage Antique

B

FVCS-CN
chair side end table
14" W x 24" D x 24" H

Hickory · Rich Tobacco

C

FVCT-CN
coffee table
42" W x 24" D x 20" H

Rustic Cherry · Michael's Cherry

D

FVCT-CN-LT
lift-top coffee table
42" W x 24" D x 20" H (top up 29¼" H)

Hickory · Rich Tobacco

A

FVET-CN
end table
17½" W x 24" D x 24" H

Hickory · Rich Tobacco

E

FVST-CN
sofa table
42" W x 17" D x 29" H

Centennial Occasionals

Standard Features

A	B	C	D	
•	•	•	•	1" Solid top
•	•	•	•	Soft close (concealed hinge) doors
•			•	Full-extension drawers
			•	Adj. shelf behind doors
•	•	•	•	Hardware = 1" Black Square knob **R** (shown)

Optional Features

A	B	C	D	
•				5" Wider, 5" Deeper, or 2" Higher
	•			32", 38", 42", or 48" Square

Rustic Cherry · Michael's Cherry

B

FVCT-CN-EN · enclosed coffee table

42" W x 24" D x 20" H

Rustic Cherry · Michael's Cherry

C

FVCT-CN-EN-LT
enclosed lift-top coffee table

42" W x 24" D x 20" H
(top up 29¼" H)

Rustic Cherry · Michael's Cherry

A

FVET-CN-EN
enclosed end table

17½" W x 24" D x 24" H

Rustic Cherry · Michael's Cherry

D

FVST-CN-EN
enclosed sofa table

42" W x 14¾" D x 29" H

Colbran
Occasionals

Standard Features

A	B	C	D	
●	●	●	●	1" Solid top
●	●		●	Full-extension drawers
		●		Recessed storage under top with counter weight
●	●		●	Hardware = 1" Black Square knob **R** (shown)

Optional Features

A	B	C	D	
●	●		●	Blum, soft close undermount drawers
●				Build as a Chair Side End Table, no drawer; 14" W. Item # **FVCS-CB**
●				5" Wider, 5" Deeper, or 2" Higher
●				30" Square (no drawer)
	●			32", 38", 42", or 48" Square

QS White Oak · Michael's Cherry

B

FVCT-CB · coffee table
46" W x 25" D x 20" H

QS White Oak · Michael's Cherry

C

FVCT-CB-LT · lift-top coffee table
46" W x 25" D x 20" H · (top up 29¼" H)

QS White Oak · Michael's Cherry

A

FVET-CB · end table
21½" W x 25" D x 24" H

QS White Oak · Michael's Cherry

D

FVST-CB · sofa table
46" W x 17½" D x 29" H

Colbran
Occasionals

Standard Features

A	B	C	D	
•	•	•	•	1" Solid top
•	•	•	•	Soft close (concealed hinge) doors
•			•	Full-extension drawers
			•	Adj. shelf behind doors
•	•		•	Hardware = 1" Black Square knob **R** (shown)

Optional Features

A	B	C	D	
•				5" Wider, 5" Deeper, or 2" Higher
	•			32", 38", 42", or 48" Square

QS White Oak · Michael's Cherry

B

FVCT-CB-EN · enclosed coffee table

46" W x 25" D x 20" H

QS White Oak · Michael's Cherry

C

FVCT-CB-EN-LT
enclosed lift-top
coffee table

46" W x 25" D x 20" H (top up 29¼" H)

QS White Oak · Michael's Cherry

A

FVET-CB-EN
enclosed end table

21½" W x 25" D x 24" H

QS White Oak · Michael's Cherry

D

FVST-CB-EN
enclosed sofa table

46" W x 15¼" D x 29" H

DOVER
Occasionals

Standard Features

A	B	C	D	
•		•	•	Full-extension drawers
•		•	•	Hardware = 1" Black knob **U** (shown)

Optional Features

A	B	C	D	
•	•			5" Wider, 5" Deeper, or 2" Higher
•				30" Square (no drawer)
		•		32", 38", 42", or 48" Square
•		•	•	Blum, soft close undermount drawers
•		•	•	Hardware = **O-1** (no up charge)

Dover leg detail

Sap Cherry · Sealy

A

FVET-D
end table
18¼" W x 24" D x 24" H

Sap Cherry · Sealy

B

FVCS-D
chair side end table
14" W x 24" D x 24" H

Sap Cherry · Sealy

C

FVCT-D
coffee table
42¾" W x 24" D x 20" H

Sap Cherry · Sealy

D

FVST-D · sofa table
42¾" W x 17¾" D x 31" H

Ensenada Occasionals

Standard Features

A	B	C	D	E	F	G	
●	●	●	●	●	●	●	1" Solid top
	●		●				Full extension drawers
				●			Recessed storage under top with counter weight
	●		●				Hardware = Satin Nickel drawer pull **T-2** (shown)

Optional Features

A	B	C	D	E	F	G	
	●	●					5" Wider, 5" Deeper, or 2" Higher
	●						30" Square (no drawer)
	●		●				Blum, soft close undermount drawers
	●		●				Hardware = **1-B** (no up charge)

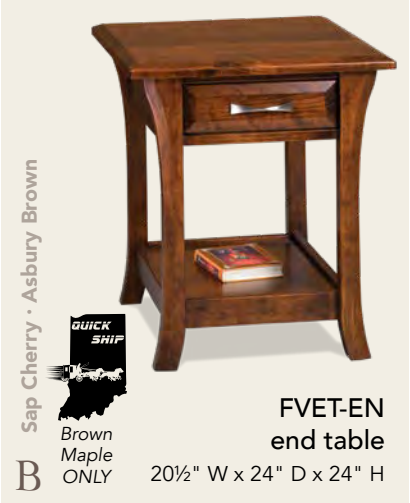

Sap Cherry · Asbury Brown

B

FVET-EN
end table
20½" W x 24" D x 24" H

Sap Cherry · Asbury Brown

C

FVCS-EN
chair side end table
14" W x 24" D x 24" H

Sap Cherry · Asbury Brown

D

FVCT-EN · coffee table
45" W x 24" D x 20" H

Sap Cherry · Asbury Brown

E

FVCT-EN-LT · lift-top coffee table
45" W x 24" D x 20" H · (top up 29¼" H)

Brown Maple · Burnt Umber

A

FVWT-EN · wedge table
front: 14" W, back: 22" W
24" D x 24" H

Brown Maple · Sandstone

F

FVET-22R-EN
round end table
22" Round x 24" H

Brown Maple · Sandstone

G

FVCT-38R-EN
round coffee table
38" Round x 20" H

Ensenada Occasionals

Standard Features

A	B	C	D	E	
●	●	●	●	●	1" Solid top
●	●			●	Full extension drawers
●		●	●	●	Soft close (concealed hinge) doors
				●	Adj. shelf behind doors
●	●	●	●	●	Hardware = 1" Satin Nickel knob and drawer pull **T-1, T-2** (shown)

Optional Features

A	B	C	D	E	
●					5" Wider, 5" Deeper, or 2" Higher
		●			32", 38", 42", or 48" Square
●	●	●	●	●	Hardware = **1-A, 1-B** (no up charge)

Sap Cherry · Asbury Brown

B

FVST-EN · sofa table
45" W x 17½" D x 29" H

Sap Cherry · Asbury Brown

C

FVCT-EN-EN · enclosed coffee table
45" W x 24" D x 20" H

Sap Cherry · Asbury Brown

D

FVCT-EN-EN-LT
enclosed lift-top coffee table
45" W x 24" D x 20" H · (top up 29¼" H)

Sap Cherry · Asbury Brown

A

FVET-EN-EN
enclosed end table
20½" W x 24" D x 24" H

Sap Cherry · Asbury Brown

E

FVST-EN-EN · enclosed sofa table
45" W x 15" D x 29" H

FINLAND
Occasionals

Standard Features

A	B	C	D	E	
●	●	●	●	●	1" Solid top
●	●	●	●	●	Full-extension drawers
	●			●	Soft close (concealed hinge) doors
				●	Adj. shelf behind doors
●	●	●	●	●	Hardware = 1¼" Satin Nickel knob **O-1** (shown)

Optional Features

A	B	C	D	E	
●	●	●	●	●	Blum, soft close undermount drawers
●	●				5" Wider, 5" Deeper, or 2" Higher
●					30" Square (no drawer)
●					Build as Chair Side End Table, no drawer; 14" W. Item # **FVCS-FL**
		●			32", 38", 42", or 48" Square
●	●	●	●	●	Hardware = **U** (no up charge)

Brown Maple · Earthtone

A

FVET-FL
end table
18½" W x 24½" D x 24" H

Brown Maple · Earthtone

B

FVET-FL-EN
enclosed end table
18½" W x 24½" D x 24" H

Brown Maple · Earthtone

C

FVCT-FL · coffee table
43" W x 24½" D x 20" H

Brown Maple · Earthtone

D

FVST-FL · sofa table
43" W x 17½" D x 29" H

Oak · Vintage Antique

E

FVST-FL-EN
enclosed sofa table
43" W x 15¼" D x 29" H

HOUSTON
Occasionals

Standard Features

A	B	C	D	E	
●	●	●	●	●	1⅛" Solid top
		●	●	●	Full-extension drawers
●	●	●	●	●	Available in Rough Sawn Rustic Brown Maple or Rough Sawn Rustic White Oak ONLY
		●	●	●	Hardware = Swedish Iron drawer pull **7-B** (shown)

Optional Features

A	B	C	D	E	
	●	●			5" Wider, 5" Deeper, or 2" Higher
		●			30" Square (no drawer)
			●		32", 38", 42", or 48" Square
		●	●	●	Blum, soft close undermount drawers
●	●	●	●	●	Wooden pegs in legs

same look in smooth finish – see **Timbra** collection pgs 76-77

HOUSTON
Occasionals

Standard Features

A	B	C	D	
●	●	●	●	1⅛" Solid top
●	●	●	●	Available in Rough Sawn Rustic Brown Maple or Rough Sawn Rustic White Oak ONLY
●	●	●	●	Black powder-coated steel base

Rough Sawn Rustic Brown Maple · Almond w/#10 Low Sheen

A

FVET-22RS/W-HT
round end table
22" Round x 24¼" H

Rough Sawn Rustic Brown Maple · Almond w/#10 Low Sheen

B

FVET-S/W-HT
end table
18¼" W x 24¼" D x 24¼" H

Rough Sawn Rustic Brown Maple · Almond w/#10 Low Sheen

C

FVCT-38RS/W-HT
round coffee table
38" Round x 20¼" H

Rough Sawn Rustic Brown Maple · Almond w/#10 Low Sheen

D

FVST-S/W-HT · sofa table
54" W x 16" D x 31¼" H

Kascade Occasionals

Standard Features

A	B	C	D	
•	•	•	•	1" Solid top
•	•		•	Full-extension drawers
		•		Recessed storage under top with counter weight
•	•		•	Hardware = 1" Black Square knob **R** (shown)

Optional Features

A	B	C	D	
•	•		•	Blum, soft close undermount drawers
•				Build as a Chair Side End Table, no drawer; 14" W. Item # **FVCS-KS**
•				5" Wider, 5" Deeper, or 2" Higher
•				30" Square (no drawer)
	•			32", 38", 42", or 48" Square

QS White Oak · Michael's Cherry

B

FVCT-KS · coffee table

42" W x 24" D x 20" H

QS White Oak · Golden Brown

C

FVCT-KS-LT · lift-top coffee table

42" W x 24" D x 20" H · (top up 29¼" H)

QS White Oak · Michael's Cherry

A

FVET-KS · end table

17½" W x 24" D x 24" H

QS White Oak · Michael's Cherry

D

FVST-KS · sofa table

42" W x 17" D x 30½" H

Kascade Occasionals

Standard Features

A	B	C	D	
•	•	•	•	1" Solid top
•	•	•	•	Soft close (concealed hinge) doors
•			•	Full-extension drawers
			•	Adj. shelf behind doors
•	•	•	•	Hardware = 1" Black Square knob **R** (shown)

Optional Features

A	B	C	D	
•				5" Wider, 5" Deeper, or 2" Higher
	•			32", 38", 42", or 48" Square

QS White Oak · Michael's Cherry

B

FVCT-KS-EN
enclosed coffee table
42" W x 24" D x 20" H

QS White Oak · Michael's Cherry

C

FVCT-KS-EN-LT
enclosed lift-top coffee table
42" W x 24" D x 20" H (top up 29¼" H)

QS White Oak · Michael's Cherry

A

FVET-KS-EN
enclosed end table
17½" W x 24" D x 24" H

QS White Oak · Michael's Cherry

D

FVST-KS-EN
enclosed sofa table
42" W x 14¾" D x 30½" H

LEXINGTON ARC
Occasionals

Standard Features

A	B	C	D	E	F	
•	•	•	•	•	•	1" Solid top
•	•	•	•	•	•	Solid, twisted legs
•	•		•		•	Full-extension drawers
•						Soft close (concealed hinge) doors
				•		Recessed storage under top with counter weight
•	•		•		•	Hardware = Satin Nickel knob & drawer pull **T-1, T-2** (shown)

Optional Features

A	B	C	D	E	F	
•	•		•		•	Blum, soft close undermount drawers
•	•	•				5" Wider, 5" Deeper, or 2" Higher
	•					30" Square (no drawer)
			•			32", 38", 42", or 48" Square
•	•		•		•	Hardware = **1-A, 1-B** (no up charge)

B

FVET-LA
end table
21¼" W x 24" D x 24" H

C

FVCS-LA
chair side end table
14" W x 24" D x 24" H

D

FVCT-LA · coffee table
45¾" W x 24" D x 20" H

E

FVCT-LA-LT · lift-top coffee table
45¾" W x 24" D x 20" H · (top up 29¼" H)

A

FVET-LA-EN
enclosed end table
21¼" W x 24" D x 24" H

F

FVST-LA · sofa table
45¾" W x 17½" D x 31" H

LEXINGTON ARC
Occasionals

Standard Features

A	B	C	D	E	
•	•	•	•	•	1" Solid top
•	•	•	•	•	Solid, twisted legs
				•	Full-extension drawers; soft close (concealed hinge) doors; 1 adj. shelf behind doors
				•	Hardware = Satin Nickel knob & drawer pull **T-1, T-2** (shown)

Optional Features

A	B	C	D	E	
				•	Blum, soft close undermount drawers
				•	Hardware = **1-A, 1-B** (no up charge)

Brown Maple · Sandstone

A

FVET-22R-LA
round end table
22" Round x 24" H

Brown Maple · Charwood (FC 50241)

B

FVET-2424TWLR-LA
round end table
24" Round x 24" H

Brown Maple · Sandstone

C

FVCT-38R-LA
round coffee table
38" Round x 20" H

Brown Maple · Charwood (FC 50241)

D

FVCT-3820TWLR-LA
round coffee table
38" Round x 20" H

Brown Maple · Sandstone

E

FVST-LA-EN
enclosed sofa table
45¾" W x 14¾" D x 31" H

Lexington Occasionals

Standard Features

A	B	C	D	E	
●	●	●	●	●	1" Solid top with Boat Shape
●	●	●	●	●	Full-extension drawers
	●			●	Soft close (concealed hinge) doors
				●	Adj. shelf behind doors
●	●	●	●	●	Hardware = 1¼" Wrought Iron knob and Wrought Iron drawer pull **W-1, W-2** (shown)

Optional Features

A	B	C	D	E	
●	●	●	●	●	Blum, soft close undermount drawers
●	●				5" Wider, 5" Deeper, or 2" Higher
●					Build as Chair Side End Table, no drawer; 14" W. Item # **FVCS-LX**
●					30" Square (no drawer)
		●			32", 38", 42", or 48" Square
●	●	●	●	●	Hardware = **4-A, 4-B** (no up charge)

Sap Cherry · Vintage Antique

A

FVET-LX · end table
20¼" W x 25" D x 24" H

Sap Cherry · Vintage Antique

B

FVET-LX-EN
enclosed end table
20¼" W x 25" D x 24" H

Sap Cherry · Vintage Antique

C

FVCT-LX · coffee table
44¾" W x 25½" D x 20" H

Sap Cherry · Vintage Antique

D

FVST-LX · sofa table
44¾" W x 17¾" D x 31" H

Oak · Vintage Antique

E

FVST-LX-EN
enclosed sofa table
44¾" W x 15½" D x 31" H

Marina
Occasionals

Standard Features

A	B	C	D	
•	•	•	•	1" Solid tops and sides
•	•	•	•	Full-extension drawers
•	•	•	•	Locking mitered joints on all corners
			•	Adj. shelf behind doors on left side
•	•	•	•	Hardware = Satin Nickel knob and drawer pulls **10-A, 10-B** (shown)

Optional Features

A	B	C	D	
•	•	•	•	Blum, soft close undermount drawers
•				5" Wider, 5" Deeper, or 2" Higher
•				30" Square (no drawer)
		•		32", 38", 42", or 48" Square with 1 drawer

Locking mitered corners

Sap Cherry · Chestnut

A

FVET-MA
end table
22" W x 24" D x 24" H

Sap Cherry · Chestnut

B

FVCS-MA
chair side end table
14¼" W x 24" D x 24" H

Sap Cherry · Mineral

C

FVCT-MA · coffee table
42" W x 24" D x 20" H

Sap Cherry · Chestnut

D

FVST-MA-EN
enclosed sofa table
54" W x 14" D x 31" H

Modesto
Occasionals

Standard Features

A	B	C	D	E	
●	●	●	●	●	1" Solid top
●		●		●	Full-extension drawers
			●		Recessed storage under top with counter weight
●		●		●	Hardware = 1" Black drawer pull **L-2** (shown)

Optional Features

A	B	C	D	E	
●		●		●	Blum, soft close undermount drawers
●	●				5" Wider, 5" Deeper, or 2" Higher
●					30" Square (no drawer)
		●			32", 38", 42", or 48" Square
●	●	●	●	●	Hardware = **M-2** (no up charge)

QS White Oak · Asbury Brown

A

FVET-MD · end table
17½" W x 24" D x 24" H

Oak · Vintage Antique

B

FVCS-MD
chair side end table
14" W x 24" D x 24" H

QS White Oak · Asbury Brown

C

FVCT-MD · coffee table
42" W x 24" D x 20" H

QS White Oak · Asbury Brown

D

FVCT-MD-LT ·
lift-top coffee table
42" W x 24" D x 20" H · (top up 29¼" H)

QS White Oak · Asbury Brown

E

FVST-MD · sofa table
42" W x 17" D x 29" H

Modesto
Occasionals

Standard Features

A	B	C	D	
•	•	•	•	1" Solid top
•	•	•	•	Soft close (concealed hinge) doors
•			•	Full-extension drawers
			•	Adj. shelf behind doors
•	•	•	•	Hardware = Black door and drawer pull **L-1, L-2** (shown)

Optional Features

A	B	C	D	
•				5" Wider, 5" Deeper, or 2" Higher
	•			32", 38", 42", or 48" Square
•	•	•	•	Hardware = **M-1, M-2** (no up charge)

QS White Oak · Michael's Cherry

B

FVCT-MD-EN
enclosed coffee table
42" W x 24" D x 20" H

QS White Oak · Michael's Cherry

C

FVCT-MD-EN-LT
enclosed lift-top coffee table
42" W x 24" D x 20" H (top up 29¼" H)

QS White Oak · Asbury Brown

A

FVET-MD-EN
enclosed end table
17½" W x 24" D x 24" H

QS White Oak · Asbury Brown

D

FVST-MD-EN
enclosed sofa table
42" W x 14¾" D x 29" H

Old Classic Sleigh Occasionals

Standard Features

A	B	C	D	
•	•	•	•	1" Solid top
•	•		•	Full-extension drawers
		•		Recessed storage under top with counter weight
•	•		•	Hardware = 1⅛" Low profile round wood knob **C-1** (shown)

Optional Features

A	B	C	D	
•				5" Wider, 5" Deeper, or 2" Higher
•				Build as a Chair Side End Table, no drawer; 14" W. Item # **FVCS-OCS**
•				30" Square (no drawer)
	•			32", 38", 42", or 48" Square
			•	Solid adj. shelf

QS White Oak · Michael's Cherry

A

FVET-OCS · end table
17½" W x 24" D x 24" H

QS White Oak · Michael's Cherry

B

FVCT-OCS · coffee table
42" W x 24" D x 20" H

QS White Oak · Michael's Cherry

C

FVCT-OCS-LT
lift-top coffee table
42" W x 24" D x 20" H · (top up 29¼" H)

QS White Oak · Michael's Cherry

D

FVST-OCS · sofa table
shown with optional shelf
42" W x 17" D x 30½" H

Old Classic Sleigh
Occasionals

Standard Features

A	B	C	
•	•	•	1" Solid top
•	•	•	Full extension drawers
•	•	•	Soft close (concealed hinge) doors
		•	Adj. shelf behind doors
•	•	•	Hardware = 1⅛", 1¾" Low profile round wood knob **C-1, C-2** (shown)

Optional Features

A	B	C	
•			5" Wider, 5" Deeper, or 2" Higher
	•		32", 38", 42", or 48" Square

QS White Oak · Michael's Cherry

A

FVET-OCS-EN
enclosed end table
17½" W x 24" D x 24" H

QS White Oak · Michael's Cherry

B

FVCT-OCS-EN
enclosed coffee table
42" W x 24" D x 20" H

QS White Oak · Michael's Cherry

C

FVST-OCS-EN
enclosed sofa table
42" W x 16" D x 30½" H

SARATOGA
Occasionals

Standard Features

A	B	C	
•	•	•	1" Solid top
•	•	•	Solid, curved base
		•	Full extension drawers
		•	Curved drawer fronts
		•	Hardware = Satin Nickel drawer pull **I-2** (shown)

Optional Features

A	B	C	
		•	Blum, soft close undermount drawers
		•	Hardware = **J-2** (no up charge)

Sap Cherry · Burnt Umber

A

FVET-24R-ST
round end table
24" Round x 24" H

Sap Cherry · Burnt Umber

B

FVCT-38R-ST
round coffee table
38" Round x 20" H

Sap Cherry · Burnt Umber

C

FVST-ST
sofa table
48" W x 19" D x 31" H

Sierra
Occasionals

Standard Features

A	B	C	D	E	F	
●	●	●	●	●	●	1" Solid top
					●	Full extension drawers
				●		Tempered glass top
					●	Hardware = 1¼" Satin Nickel round knob **O-1** (shown)

Optional Features

A	B	C	D	E	F	
			●			Solid shelf
●						5" Wider, 5" Deeper, or 2" Higher
					●	Blum, soft close undermount drawers

Brown Maple · Rich Tobacco

B

FVET-22R-SR
round end table
22" Round x 24" H

Sap Cherry · Earthtone

C

FVET-24R-SR
round end table
24" Round x 24" H

Brown Maple · Rich Tobacco

D

FVCT-38R-SR
round coffee table
38" Round x 20" H

Brown Maple · Rich Tobacco

E

FVCT-38RGT-SR
round glass-top
coffee table
38" Round x 20" H

Brown Maple · Rich Tobacco

A

FVET-SR · end table
22" W x 24" D x 24" H

Brown Maple · Rich Tobacco

F

FVST-SR · sofa table
52" W x 17" D x 31" H

TIMBRA
Occasionals

Standard Features

A	B	C	D	E	
●	●	●	●	●	1" Solid top
●		●	●	●	Full-extension drawers
●		●	●	●	Hardware = Swedish Iron drawer pull **7-B** (shown)

Optional Features

A	B	C	D	E	
●		●	●	●	Blum, soft close undermount drawers
●	●				5" Wider, 5" Deeper, or 2" Higher
●					30" Square (no drawer)
		●	●		32", 38", 42", or 48" Square
		●	●		Build as Lift-Top Coffee Table, no drawer; 43¾" W x 24" D x 20" H Add code **LT**
●	●	●		●	Change standard top to Ocean Wave Edge top; add code **OWE**

same look in rough sawn –
see **Houston** collection pg 62-63

Oak · Vintage Antique

A

FVET-TB
end table
19¼" W x 24" D x 24" H

Rustic Hickory · Golden Pecan

B

FVCS-TB
chair side end table
14" W x 24" D x 24" H

Rustic Hickory · Golden Pecan

C

FVCT-TB
coffee table
43¾" W x 24" D x 20" H

Plain Sawn White Oak · Natural Effect

D

FVCT-TB-OWE
coffee table w/optional Ocean Wave Edge
43¾" W x 24" D x 20" H

Rustic Hickory · Golden Pecan

E

FVST-TB · sofa table
43¾" W x 17½" D x 31" H

TIMBRA
Occasionals

Standard Features

A	B	C	D	
•	•	•	•	1" Solid top
•		•	•	Full-extension drawers
•		•	•	Hardware = Swedish Iron drawer pull **7-B** (shown)

Optional Features

A	B	C	D	
•		•	•	Blum, soft close undermount drawers
•	•	•	•	1¼" thick live edge top (as shown), add code **LET**
•		•	•	Hardware = **13-B** (no up charge)

same look in rough sawn –
see **Houston** collection pg 62-63

Rustic Walnut · Bel Air

A

FVET-TB-LET
end table
19¼" W x 24" D x 24" H

Sap Cherry · Chestnut

B

FVCS-TB-LET
chair side end table
14" W x 24" D x 24" H

Rustic Walnut · Bel Air

C

FVCT-TB-LET
coffee table
43¾" W x 24" D x 20" H

Rustic Walnut · Bel Air

D

FVST-TB-LET · sofa table
43¾" W x 17½" D x 31" H

West Lake Occasionals

Standard Features

A	B	C	D	E	
●	●	●	●	●	1" Solid top
●		●		●	Full extension drawers
			●		Recessed storage under top with counter weight
●		●		●	Hardware = Weathered Nickel drawer pull **F-2** (shown)

Optional Features

A	B	C	D	E	
●	●	●	●	●	Omit rope detail (no up charge)
●	●	●	●	●	Omit leg grooves (no up charge)
●		●		●	Blum, soft close undermount drawers
●	●				5" Wider, 5" Deeper, or 2" Higher
●					30" Square (no drawer)
		●			32", 38", 42", or 48" Square

QS White Oak · Michael's Cherry

A

FVET-WL
end table
22" W x 24" D x 24" H

Oak · Vintage Antique

B

FVCS-WL
chair side end table
14" W x 24" D x 24" H

QS White Oak · Michael's Cherry

C

FVCT-WL
coffee table
42" W x 24" D x 20" H

QS White Oak · Michael's Cherry

D

FVCT-WL-LT · lift-top coffee table
42" W x 24" D x 20" H · (top up 29¼" H)

QS White Oak · Michael's Cherry

E

FVST-WL
sofa table
42" W x 17" D x 29" H

West Lake Occasionals

Standard Features

A	B	
•	•	1" Solid top
•	•	Full extension drawers
•	•	Soft close (concealed hinge) doors
	•	Adj. shelf behind doors
•	•	Hardware = Weathered Nickel drawer pull and knob **F-1, F-2** (shown)

Optional Features

A	B	
•	•	Omit rope detail (no up charge)
•	•	Omit leg grooves (no up charge)
•	•	Blum, soft close undermount drawers
•		5" Wider, 5" Deeper, or 2" Higher

QS White Oak · Michael's Cherry

A

FVET-WL-EN
enclosed end table
22" W x 24" D x 24" H

QS White Oak · Michael's Cherry

B

FVST-WL-EN
enclosed sofa table
42" W x 15" D x 29" H

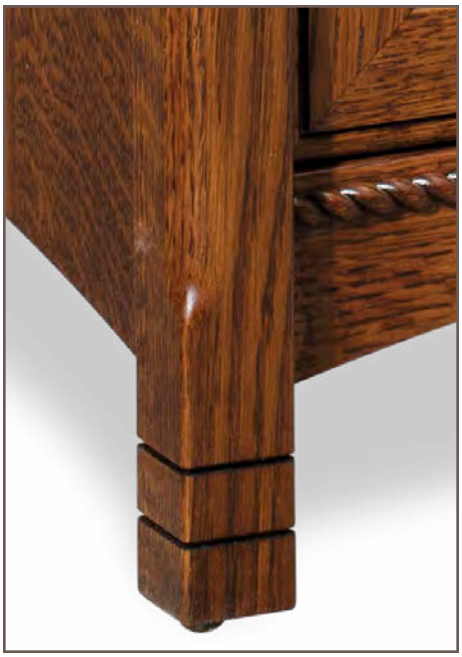

FORKS VALLEY WOODWORKING

Better Because . . .

STANDARDS FOR MEDIA STANDS

Leg levelers on all legs for easy in home leveling

⅝" Thick dovetailed, full-extension functional drawers

¾" Raceway in back for easy wiring from shelf to shelf in all component areas.

All shelves are fully adjustable.

Solid hardwood sides and tops

Adjustable shelves are made of top grade hardwood plywood with solid nosing the front

Optional solid shelves available upon request

Bottoms underneath media stands (with drawers on bottom) create a dust shield and add sturdiness.

OPTIONS FOR MEDIA STANDS

Change standard top to 1¼" thick Live Edge top on any media stand; add code **LET** after standard product code.

Change drawers to open area. When drawers are on the bottom, open area moves above doors (along the top).

Change standard top to Ocean Wave Edge top on any media stand; add code **OWE** after standard product code.

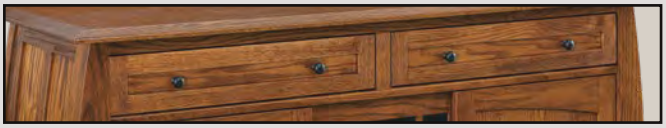

Change open area to drawers on any media stand.

Add 4¼" high open sound bar area along top, on any stand; adds 6" overall height. Add code **SB** after standard product code

Blum – soft close undermount slides

Add 23" wide fireplace to any media stand; add code **FP** after any standard product code.

LED lighting with dimmable touch switch (warm white)

4 Heavy-duty casters (600 lb. total capacity)

Media Stands & Entertainment Center

In widths from 48" to 84", and storage options including shelves, doors, drawers or combination configurations, there is a Forks Valley unit for all TVs, DVD players, game systems and accessories.

Artesa Media Stands

Standard Features

A	B	C	D	
•	•	•	•	Solid, 4-sided tapered legs
•		•		Soft close, concealed hinge doors with 1 adj. shelf and cord hole
	•			2 Adj. shelves with cord hole behind each door
		•		23" wide fireplace
			•	Smoked glass; 2 Adj. shelves behind glass doors
			•	Smooth sliding track for all doors with simple mechanism for easy removal
			•	1 Adj. shelf on left side; 2 hidden drawers with shelf behind right door
•	•	•	•	Hardware = Wrought Iron knob & drawer pull **P-1, P-2** (shown)

Optional Features

A	B	C	D	
•		•		Change open area to 2 drawers
	•			Add 2 wood or smoked glass doors to open area
			•	Add 4¼" H open sound bar area along top, adds 6" to overall height; add **SB** after standard product code
			•	Self-positioning, soft-closing sliding doors
			•	Change sliding doors to hinged doors (no up charge)

See pages 197-198 for dimensional details.

Rustic Cherry · Earthtone

A

FVE-10-A (shown)
64¼" W x 14⅞" D x 39¼" H

Also available:

FVE-25-A (3 doors)
73¼" W x 14⅞" D x 39¼" H

FVE-40-A (4 doors)
85¼" W x 14⅞" D x 39¼" H

Rustic Cherry · Almond

B

FVE-26-A (shown)
73¼" W x 14⅞" D x 39¼" H

Also available:

FVE-11-A
64¼" W x 14⅞" D x 39¼" H

FVE-41-A
85¼" W x 14⅞" D x 39¼" H

Cherry · Earthtone

C

FVE-3672-A-FP
72" W x 19¾" D x 36" H

Rustic Cherry · Michael's Cherry

D

FVE-060-A-BP
63" W x 19¾" D x 30¼" H

Hidden Drawers

Boulder Creek
Media Stands

Standard Features

A	B	C	D	
•	•	•	•	Curved, reversed panel sides
•	•	•	•	Soft close (concealed hinge) doors
•			•	1 Adj. shelf behind each door
	•	•		2 Adj. shelves behind wooden doors
			•	Smoked glass
•	•	•	•	Hardware =1" Black knob **U** (shown)

Optional Features

A	B	C	D	
•	•	•	•	Omit inlays (no up charge)
	•	•	•	Blum, soft close undermount drawers
	•	•		Add 2 wood or smoked glass doors to open area
•				Change open area to 2 drawers
			•	Change drawers to open area above doors
•	•	•	•	Hardware = **O-1** (no up charge)

See pages 197-198 for dimensional details.

Rustic QS White Oak · Earthtone

A

FVE-25-BC (shown)
71⅜" W x 15" D x 36" H

Also available:

FVE-10-BC (3 doors)
62⅜" W x 15" D x 36" H

FVE-40-BC (4 doors)
83⅝" W x 15" D x 36" H

Rustic Hickory · Almond

B

QUICK SHIP

Rustic Hickory ONLY

FVE-26-BC (shown)
71⅜" W x 15" D x 36" H

Also available:

FVE-11-BC
62⅜" W x 15" D x 36" H

Rustic QS White Oak · Michael's Cherry

C

FVE-41-BC
83⅜" W x 15" D x 36" H

QS White Oak · Michael's Cherry

D

FVE-032-BC-BP
63" W x 19" D x 29" H

Boulder Creek
Media Stands

Standard Features

A	B	C	D	
•	•	•	•	Curved, reversed panel sides
•	•	•	•	Smoked glass
•	•	•	•	Smooth sliding track for all doors with simple mechanism for easy removal
•	•	•		2 Adj. shelves behind glass doors
	•	•		1 Adj. shelf on left side; 2 hidden drawers with shelf behind right door
			•	1 Adj. shelf behind each door
•	•	•	•	Hardware = 1" Black knob **U** (shown)

Optional Features

A	B	C	D	
•	•	•	•	Self-positioning, soft-closing sliding doors
•	•	•	•	Change sliding doors to hinged doors (no up charge)
•	•	•	•	Omit inlays (no up charge)
•	•	•		Add 4¼" H open sound bar area along top, adds 6" to overall height; add **SB** after standard product code
			•	Change open area to 2 drawers
•	•	•	•	Hardware = **O-1** (no up charge)

Sliding Door

Hidden Drawers

See page 198 for dimensional details.

Cherry · CF-811 Cherry

A

FVE-048-BC
48" W x 19¾" D x 29" H

QS White Oak · Golden Brown

B

FVE-060-BC-BP
63" W x 19¾" D x 29" H

Rustic Cherry · Michael's Cherry

C

FVE-072-BC-BP
72" W x 19¾" D x 29" H

Rustic Hickory · Golden Harvest

QUICK SHIP Rustic Hickory ONLY

D

FVE-060-BC36
63" W x 19¾" D x 36" H

Carlisle
Media Stands

Standard Features

A	B	
•	•	1" Solid top
•	•	Soft close (concealed hinge) doors
•	•	1 Adj. shelf behind each door, with cord hole in back
•	•	Hardware = 1¼", 1½" round wood knob **A-1, A-2** (shown)

Optional Features

A	B	
•	•	Change wood door to smoked glass (no up charge)
•		Change open area to 2 drawers
	•	Blum, soft close undermount drawers

FVE-3263-CR
63" W x 18½" D x 32" H

FVE-072-CR
72" W x 18½" D x 32" H

See pages 198-199 for dimensional details.

Centennial
Media Stands

Standard Features

A	B	C	D	
●	●	●	●	1" Solid top
●	●	●	●	Smoked glass
●	●	●	●	Soft close (concealed hinge) doors
●	●	●	●	1 Adj. shelf behind each door
		●		2 Adj. shelves behind glass doors
●	●	●	●	Hardware = 1" Black square knob **R** (shown)

Optional Features

A	B	C	D	
●	●		●	Add 4¼" H open sound bar area along top, adds 6" to overall height; add **SB** after standard product code
●	●	●	●	Blum, soft close undermount drawers
●	●	●	●	Change drawers to open VCR area above doors
●	●	●	●	Arts & Crafts mullion design **MLAC** must specify (no up charge)

See page 199 for dimensional details.

QS White Oak · Michael's Cherry

A

FVE-031-CN
48" W x 18¼" D x 29" H

QS White Oak · Michael's Cherry

B

FVE-032-CN-BP
60" W x 18¼" D x 29" H

QS White Oak · Michael's Cherry

C

FVE-032-CN-BP 36"
60" W x 18¼" D x 36" H

QS White Oak · Golden Brown

D

FVE-072-CN-BP
72" W x 18¼" D x 29" H

Classic and Colbran Media Stands

Standard Features

A	B	C	D	
•	•	•	•	Soft close (concealed hinge) doors
•	•	•	•	1 Adj. shelf behind each door
	•	•	•	1" Solid top
	•	•	•	Solid tapered sides
	•	•	•	Smoked glass
•				Hardware = 1¼" Round wood knob **A-1** (shown)
	•	•	•	Hardware = 1" Black square knob **R** (shown)

Optional Features

A	B	C	D	
•				Swivel top (34" W x 15¾" D)
•				Change wood doors to smoked glass (no up charge)
	•	•	•	Add 4¼" H open sound bar area along top, adds 6" to overall height; add **SB** after standard product code
	•	•	•	Blum, soft close undermount drawers
	•	•	•	Change drawers to open area above doors
	•	•	•	Arts & Crafts mullion design **MLAC** must specify (no up charge)

Arts & Crafts mullion design **MLAC**

See pages 199 and 202 for dimensional details.

Oak · Nutmeg

A

FVE-024-C-XL
Classic media stand with optional swivel
43" W x 17¾" D x 29¼" H

QS White Oak · Michael's Cherry

B

FVE-031-CB
Colbran media stand
49¼" W x 18¾" D x 29" H

QS White Oak · Michael's Cherry

C

FVE-032-CB-BP
Colbran media stand
61¼" W x 18¾" D x 29" H

QS White Oak · Golden Brown

D

FVE-072-CB-BP
Colbran media stand with optional mullion design **MLAC**
73¼" W x 18¾" D x 29" H

DOVER
Media Stands

Standard Features

A	B	
•	•	Soft close (concealed hinge) doors
•		1 Adj. shelf and cord hole behind each door
	•	2 Adj. shelf and cord hole behind each door
•	•	Hardware = 1" Black knob **U** (shown)

Optional Features

A	B	
•		Change open area to 2 drawers
	•	Blum, soft close undermount drawers
	•	Add 2 wood or smoked glass doors to open area
•	•	Hardware = 1¼" Satin Nickel knob **O-1** (no up charge)

Oak · Sealy

A

FVE-10-D (shown)
61⅝" W x 14" D x 35⅞" H

Also available:

FVE-25-D (3 doors)
70⅝" W x 14" D x 35⅞" H

FVE-40-D (4 doors)
82⅝" W x 14" D x 35⅞" H

Sap Cherry · Sealy

B

FVE-26-D (shown)
70⅝" W x 14" D x 35⅞" H

Also available:

FVE-11-D
61⅝" W x 14" D x 35⅞" H

FVE-41-D
82⅝" W x 14" D x 35⅞" H

See page 197 for dimensional details.

Ensenada Media Stands

Standard Features

A	B	C	D	E	
●	●	●	●		Soft close (concealed hinge) doors
				●	Smooth sliding track for all doors with simple mechanism for easy removal
●		●	●	●	1 Adj. shelf and cord hole behind each door
	●				2 Adj. shelves and cord hole behind each door
			●		23" wide fireplace
●	●	●	●	●	Hardware = 1" Satin Nickel knob and drawer pull **T-1, T-2** (shown)

Optional Features

A	B	C	D	E	
●			●	●	Change open area to 2 drawers
	●	●			Blum, soft close undermount drawers
	●	●			Add 2 wood or smoked glass doors to open area
●	●	●	●	●	Hardware = **1-A, 1-B** (no up charge)

See pages 197 and 199 for dimensional details.

Hickory · Almond

A

FVE-40-EN (shown)
85⅞" W x 14½" D x 38" H

Also available:

FVE-10-EN (3 doors)
64⅞" W x 14½" D x 38" H

FVE-25-EN (4 doors)
73⅞" W x 14½" D x 38" H

Sap Cherry · Asbury Brown

B

QUICK SHIP

Brown Maple ONLY

FVE-26-EN (shown)
73⅞" W x 14½" D x 38" H

Also available:

FVE-11-EN
64⅞" W x 14½" D x 38" H

FVE-41-EN
85⅞" W x 14½" D x 38" H

Sap Cherry · Asbury Brown

C

FVE-072-EN
72" W x 18½" D x 31" H

Oak · Mineral

D

FVE-3463-EN-FP
63" W x 19½" D x 34" H

Sap Cherry · Asbury Brown

QUICK SHIP

Brown Maple ONLY

E

FVE-3463-EN
63" W x 19½" D x 34" H

FINLAND
Media Stands

Standard Features

A	B	
•	•	Soft close (concealed hinge) doors
•	•	1 adj. shelf and cord hole behind each door
•	•	Hardware = 1¼" Satin Nickel knob **O-1** (shown)

Optional Features

A	B	
•	•	Change wood door to smoked glass (no up charge)
•		Change open area to 2 drawers
	•	Blum, soft close undermount drawers
•	•	Hardware = **U** (no up charge)

Oak · Vintage Antique

A

FVE-3463-FL
63" W x 18¼" D x 34" H

Brown Maple · Earthtone

B

FVE-072-FL
72" W x 18¼" D x 31" H

See page 200 for dimensional details.

HOUSTON
Media Stands

Standard Features

A	B	C	D	E	
●	●	●	●	●	Available in Rough Sawn Rustic Brown Maple or Rough Sawn Rustic White Oak ONLY
●		●	●	●	1 Adj. shelf in each compartment
	●				2 Adj. shelves and cord hole behind each door
●	●				Soft close (concealed hinge) doors
		●	●	●	Self-positioning, soft close sliding doors
		●			23" wide fireplace
●	●	●	●	●	Hardware = Swedish Iron door pull **7-B** (shown)

Optional Features

A	B	C	D	E	
●	●	●	●	●	Wooden pegs in legs
	●		●	●	Blum, soft close undermount drawers
●					Replace open area with 2 drawers
	●				Add 2 wood or smoke glass doors to open area

See pages 197 and 200 for dimensional details.

Rough Sawn Rustic Brown Maple · Almond w/#10 Low Sheen

A

FVE-40-HT (shown)
82⅝" W x 14⅜" D x 36¼" H

Also available:

FVE-10-HT (3 doors)
61⅝" W x 14⅜" D x 36¼" H

FVE-25-HT (4 doors)
70⅝" W x 14⅜" D x 36¼" H

Rough Sawn Rustic Brown Maple · Almond w/#10 Low Sheen

QUICK SHIP

Rustic Rough Sawn Brown Maple ONLY

B

FVE-26-HT (shown)
70⅝" W x 14⅜" D x 36¼" H

Also available:

FVE-11-HT
61⅝" W x 14⅜" D x 36¼" H

FVE-41-HT
82⅝" W x 14⅜" D x 36¼" H

Rough Sawn White Oak · Bel Air w/#10 Low Sheen

C

FVE-3172-HT-FP
72" W x 19½" D x 31¼" H

Rough Sawn Rustic Brown Maple · Almond w/#10 Low Sheen

D

FVE-3172-HT
72" W x 19½" D x 31¼" H

Rough Sawn Rustic Brown Maple · Bel Air w/#10 Low Sheen

QUICK SHIP

Rustic Rough Sawn Brown Maple ONLY

E

FVE-3160-HT
60" W x 19½" D x 31¼" H

Kascade
Media Stands

Standard Features

A	B	C	
•	•	•	Smoked glass
•	•	•	Smooth sliding track for all doors with simple mechanism for easy removal
•	•	•	2 Adj. shelves behind glass doors
•		•	1 Adj. shelf on left side; 2 hidden drawers with shelf behind right door
	•		1 Adj. shelf behind wood doors
•	•	•	Hardware = 1" Black square knob **R** (shown)

Optional Features

A	B	C	
•		•	Add 4¼" H open sound bar area along top, adds 6" to overall height; add **SB** after standard product code
•	•	•	Self-positioning, soft-closing sliding doors
•	•	•	Change sliding doors to hinged doors (no up charge)
	•		Blum, soft close undermount drawers

Sliding Door

Hidden Drawers

See page 200 for dimensional details.

QS White Oak · Michael's Cherry

A

FVE-060-KS-BP
63" W x 19¾" D x 29" H

QS White Oak · Michael's Cherry

B

FVE-3663-KS-BP
63" W x 19¾" D x 36" H

QS White Oak · Golden Brown

C

FVE-072-KS-BP
72" W x 19¾" D x 29" H

Lexington
Media Stands

Standard Features

A	B	
•	•	Soft close (concealed hinge) doors
•	•	1 Adj. shelf and cord hole behind each door
•	•	Hardware = 1¼" Wrought Iron knob and drawer pull **W-1, W-2** (shown)

Optional Features

A	B	
•	•	Change wood door to smoked glass (no up charge)
	•	Blum, soft close undermount drawers
•		Change open area to 2 drawers
•	•	Hardware = **4-A, 4-B** (no up charge)

FVE-3163-LX
63" W x 19½" D x 31" H

FVE-072-LX
72¼" W x 19½" D x 31" H

Sliding Door

See page 201 for dimensional details.

LEXINGTON ARC
Media Stands

Standard Features

A	B	C	D	E	
●	●	●	●	●	Soft close (concealed hinge) doors
●			●	●	1 Adj. shelf behind each door
	●	●			2 Adj. shelves and cord hole behind each door
●	●	●	●	●	Hardware = 1" Satin Nickel knob and drawer pull **T-1, T-2** (shown)

Optional Features

A	B	C	D	E	
●	●	●	●	●	Change wood door to smoked glass (no up charge)
●				●	Change open area to 2 drawers
	●	●	●		Add 2 wood or smoked glass doors to open area
	●	●	●		Blum, soft close undermount drawers
●	●	●	●	●	Hardware = **1-A, 1-B** (no up charge)

See pages 197 and 201 for dimensional details.

Brown Maple · Manchester

A

FVE-25-LA (shown)
73⅞" W x 14½" D x 38" H

Also available:

FVE-10-LA (3 doors)
64⅞" W x 14½" D x 38" H

FVE-40-LA (4 doors)
85⅞" W x 14½" D x 38" H

Brown Maple · Lace

QUICK SHIP
Brown Maple ONLY

B

FVE-26-LA (shown)
73⅞" W x 14½" D x 38" H

Also available:

FVE-11-LA
64⅞" W x 14½" D x 38" H

Brown Maple · Lace

C

FVE-41-LA
85⅞" W x 14½" D x 38" H

Sap Cherry · Earthtone

D

FVE-072-LA
72¼" W x 19¾" D x 31" H

Brown Maple · Burnt Umber

QUICK SHIP
Brown Maple ONLY

E

FVE-3163-LA
63" W x 19¾" D x 31" H

Marina
Media Stands

Standard Features

A	B	
•	•	1" solid tops and sides
•	•	Locking mitered joints on corners
•	•	Soft close (concealed hinge) doors with 1 adj. shelf behind each door
•	•	Hardware = Satin Nickel knob and drawer pull **10-A, 10-B** (shown)

Optional Features

A	B	
•	•	Blum, soft close undermount drawers
•	•	Change open area to drawers
•	•	Change wood door to smoked glass (no up charge)

Sap Cherry · Chestnut

A

FVE-3463-MA
63" W x 18" D x 34" H

Rustic Walnut · Bel Air

B

FVE-072-MA
72" W x 18" D x 23½" H

Locking mitered corners

See page 201 for dimensional details.

Modesto
Media Stands

Standard Features

A	B	C	
●	●	●	1" Solid top
●	●	●	Smoked glass
●	●	●	Soft close (concealed hinge) doors
●			2 Adj. shelves behind glass doors
	●	●	1 adj. shelf behind doors
●	●	●	Hardware = Black pull and drawer pull **L-1, L-2** (shown)

Optional Features

A	B	C	
●	●	●	Add 4¼" H open sound bar area along top, adds 6" to overall height; add **SB** after standard product code
●	●	●	Blum, soft close undermount drawers
●	●	●	Change drawers to open area above doors
●	●	●	Mullion design, must specify (no up charge)
●	●	●	Hardware = **M-1, M-2** (no up charge)

Arts & Crafts mullion design **MLAC**

Centennial mullion design **MLCN**

See page 199 for dimensional details.

QS White Oak · Michael's Cherry

A

FVE-032-MD-BP 36"
with optional mullion design **MLCN**
60" W x 18¼" D x 36" H

QS White Oak · Michael's Cherry

B

FVE-032-MD-BP
60" W x 18¼" D x 29" H

QS White Oak · Asbury Brown

C

FVE-072-MD-BP
72" W x 18¼" D x 29" H

Old Classic Sleigh SARATOGA and Sierra Media Stands

QS White Oak · Michael's Cherry

A

FVE-043-OCS-BP
Old Classic Sleigh media stand
60" W x 20¼" D x 30½" H

QS White Oak · Golden Brown

B

FVE-072-OCS-BP
Old Classic Sleigh media stand
72" W x 20¼" D x 30½" H

Sap Cherry · Burnt Umber

C

FVE-3474-ST
Saratoga media stand
74" W x 19¾" D x 34" H

Sap Cherry · Vintage Antique

D

FVE-3463-SR
Sierra media stand
63" W x 19" D x 34" H

Standard Features

A	B	C	D	
•	•	•	•	1" Solid top
•	•		•	Smoked glass
•	•	•	•	Soft close (concealed hinge) doors
•	•		•	1 Adj. shelf behind each door
		•		Solid curved base, curved drawer fronts
		•		2 Adj. shelves behind each door
•	•			Hardware = 1⅛", 1¾" Low profile round wood knob **C-1, C-2** (shown)
		•		Hardware = 1¼" Satin Nickel knob and drawer pull **I-1, I-2** (shown)
			•	Hardware = 1¼" Satin Nickel knob **O-1** (shown)

Optional Features

A	B	C	D	
•	•	•		Blum, soft close undermount drawers
•	•			Change drawers to open area above doors
		•		Change wood door to smoked glass
			•	Change open area to 2 drawers
		•		Hardware = **J-1, J-2** (no up charge)

See pages 201-202 for dimensional details.

TIMBRA

Media Stands

Standard Features

A	B	C	
•	•	•	1 Adj. shelf in each compartment
•	•	•	Self-positioning, soft close sliding doors
		•	1¼" thick Live edge tops
•	•	•	Hardware = Swedish Iron door pull **7-B** (shown)

Optional Features

A	B	C	
•	•	•	Blum, soft close undermount drawers
•	•		1¼" thick live edge top, add code **LET**
	•		Add 23" W fireplace in center section (no drawer), code **FVE-3172-TB-FP**

Rustic Hickory · Golden Pecan

A

FVE-3160-TB
60" W x 19½" D x 31" H

Rustic QS White Oak · Asbury

B

FVE-3172-TB
72" W x 19½" D x 31" H

Sap Cherry · Chestnut

C

FVE-3160-TB-LET
60" W x 19½" D x 31¼" H
shown with optional live edge top

See page 200 for dimensional layouts.

West Lake
Media Stands

Standard Features

A	B	
•	•	1" Solid top
•	•	Mitered corners on doors and drawer fronts
•	•	Smoked glass
•	•	Soft close (concealed hinge) doors
•	•	1 Adj. shelf behind each door
•	•	Hardware = Weathered Nickel drawer pull and knob **F-1, F-2** (shown)

QS White Oak · Michael's Cherry

A

FVE-031-WL
48" W x 18½" D x 30½" H

Optional Features

A	B	
•	•	Add 4¼" H open sound bar area along top, adds 6" to overall height; add **SB** after standard product code
•	•	Blum, soft close undermount drawers
•	•	Change glass doors to wood
•	•	Change drawers to open area above doors

QS White Oak · Golden Brown

B

FVE-032-WL-BP
60" W x 18½" D x 30½" H

Also available:
FVE-072-WL-BP
72" W x 18½" D x 30½" H

See page 199 for dimensional details.

Centennial
Entertainment Center

QS White Oak · Michael's Cherry

FVE-05-CN
57¼" W x 19¾" D x 60" H
(45" wide TV area)

Standard Features

- Soft close (concealed hinge) doors
- Smoked glass
- Bifold pocket doors
- 1 Adj. shelf behind glass doors
- Hardware =1" Black square knob **R** (shown)

Optional Features

- DVD drop box
- Omit bifold pocket doors (adds 7" to TV area width)

See page 202 for dimensional details.

Edible Flowers

FORKS VALLEY WOODWORKING

Better Because …

STANDARDS FOR MEDIA WALL UNITS

Dimmable LED touch lighting on all lights (warm white)

Leg levelers on all legs for easy in home leveling.

OPTIONS FOR MEDIA WALL UNITS

Add 5" high sound bar compartment to wall unit consoles on **FVE-049, 051** (Adds 6¾" height to console, must specify when ordering)

Blum, soft close undermount slides

Add 23" wide fireplace to any wall unit console; add code **FP** after any console product code.

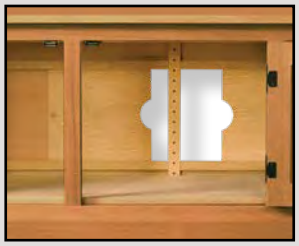

Sliding back panel on console for easy wiring access. 24" W x 12" H (must specify)

On all FVE-049, 051, or 058 Wall Units: eliminate the bridge & shelf above TV and hanging back; make as a 3-piece unit. Add code **3PC** (ex. FVE-049-MD-45½-3PC)

4 Heavy-duty casters (600 lb. total capacity) on wall unit consoles **FVE-049,051,058**

¾" Thick back in TV area to hang TV on for any wall unit

Media Wall Units

What sophisticated work of art should grace the wall of a large living room, a spacious family room or any other room needing an exceptional focal point? A Forks Valley wall unit is the perfect answer. Bonuses include lots of storage, room for displaying treasures, and the warm beauty of solid wood.

Artesa 3pc Wall Unit

Center unit available in 4 TV widths, specify when ordering.
45½" W | 50½" W | 55½" W | 60½" W

Special Note:
complete wall unit is 4" less deep than in 2024. See dimensional drawings referenced below for exact depth

Rustic Cherry · Michael's Cherry

A

FVE-193-A
specify width when ordering

Standard Features

A	B	
•	•	Soft close (concealed hinge) doors
•	•	Leg levelers
•	•	Adjustable shelf with touch lighting above TV area
•	•	1 Adj. shelf behind each wood door
•		LED touch lighting with 6 adj. glass shelves
•	•	For wider widths – center door stays constant, side doors get wider
•	•	Hardware = 1" Wrought Iron knob **P-1** (shown)

Rustic Cherry · Michael's Cherry

B

FVE-191-A
specify width when ordering

Optional Features

A	B	
•	•	Make center unit 2 pieces

See complete options list on pg 102

See page 203 for dimensional details.

Boulder Creek
6pc Wall Unit

Center unit available in 5 TV widths, specify when ordering.
45½" W | 50½" W | 55½" W
60½" W | 68½" W

QS White Oak · Golden Brown

FVE-049-BC
includes console
specify width when ordering

Special Note: complete wall unit is 4" less deep than in 2024. See dimensional drawings referenced below for exact depth

Standard Features

- Curved, solid reversed panel sides
- Soft close (concealed hinge) doors
- Leg levelers
- Console included, bolted to side cabinets
- 1 Adj. shelf behind each door
- Adjustable shelf below bridge
- Full hanging back behind TV area
- LED touch lighting with 3 adj. glass shelves in each side cabinet
- For wider widths – center door stays constant, side doors get wider
- Hardware = 1" Black knob **U** (shown)

Optional Features

- Heavy duty casters (console only)
- Hardware = **O-1**
  (no up charge)

See complete options list on pg 102

See page 203 for dimensional details.

Colbran
4pc Wall Unit

Center unit available in 4 TV widths, specify when ordering.
45½" W | 50½" W | 55½" W | 60½" W

Special Note:
complete wall unit is 4" less deep than in 2024. See dimensional drawings referenced below for exact depth

FVE-193-CB
specify width when ordering

Standard Features

A	B	
•	•	Soft close (concealed hinge) doors
•	•	Leg levelers
•	•	Adjustable shelf with touch lighting above TV area
•	•	1 Adj. shelf behind each door
•	•	Two-piece center unit
•		LED touch lighting with 6 adj. glass shelves
•	•	For wider widths – center door stays constant, side doors get wider
•	•	Hardware = 1" Black square knob **R** (shown)

FVE-191-CB
specify width when ordering

Optional Features

See complete options list on pg 102

See page 204 for dimensional details.

Ensenada 6pc Wall Unit

Standard Features

- Self-positioning, soft close barn doors on top
- Soft close (concealed hinge) doors on base
- Leg levelers
- 3 pc. base is bolted together
- 1 Adj. shelf behind each door
- 2 Adj. shelves on each side, on top
- Hardware = Satin nickel door pull **9-B** (shown)

Sap Cherry · Asbury

FVE-85110-EN · 6pc Wall Unit
110¾" W x 18¾" D x 84¾" H (TV area: 50½" W x 13¼" D x 42¾" H)

Optional Features

- Available in 60½" W TV area, standard depth and height; complete unit 20" wider; center console 3 doors; sides 1 drawer, 2 door base. **FVE-85130-EN**
- Adjustable shelf above TV
- Satin nickel door hangers and track
- 1/4" Thick, full hanging back behind TV area
- 3/4" Thick back to hang TV on
- Omit barn doors on top
- Add touch lights with glass shelves in top, side cabinets

See complete options list on pg 102

FVE-36110-EN · 3pc Base only
110¼" W x 18¾" D x 36" H

Optional full hanging back

See page 208 for dimensional details.

Ensenada
6pc Wall Unit

Center unit available in 5 TV widths, specify when ordering.

45½" W | 50½" W | 55½" W

60½" W | 68½" W

Sap Cherry · Asbury Brown

FVE-058-EN
includes console
specify width when ordering

Special Note: complete wall unit is 4" less deep than in 2024. See dimensional drawings referenced below for exact depth

Standard Features

- Soft close (concealed hinge) doors
- Leg levelers
- Console included, bolted to side cabinets
- 1 Adj. shelf behind each wood door
- Adjustable shelf below bridge
- Full hanging back behind TV area
- LED touch lighting with 3 adj. glass shelves in each side cabinet
- For wider widths – center door stays constant, side doors get wider
- Hardware = 1" Satin Nickel knob and drawer pull **T-1, T-2** (shown)

Optional Features

- Heavy duty casters (console only)
- Hardware = **1-A, 1-B** (no up charge)

See complete options list on pg 102

See page 204 for dimensional details.

Hoosier Heritage
6pc Wall Unit

Center unit available in 5 TV widths, specify when ordering.

45½" W | 50½" W | 55½" W

60½" W | 68½" W

FVE-049-HH
includes console
specify width when ordering

Special Note: complete wall unit is 4" less deep than in 2024. See dimensional drawings referenced below for exact depth

Standard Features

- Soft close (concealed hinge) doors
- Leg levelers
- Console included, bolted to side cabinets
- 1 Adj. shelf behind each console door
- Adjustable shelf below bridge
- Full hanging back behind TV area
- LED touch lighting with 3 adj. glass shelves in each side cabinet
- For wider widths – center door stays constant, side doors get wider
- Hardware = 1¼" Oil rubbed bronze knob and drawer pull **S-1, S-2** (shown)

Optional Features

- Heavy duty casters (console only)

See complete options list on pg 102

See page 205 for dimensional details.

MANHATTAN MISSION
3pc Wall Unit

Center unit available in 4 TV widths, specify when ordering.
45½" W | 50½" W | 55½" W | 60½" W

Special Note:
complete wall unit is 4" less deep than in 2024. See dimensional drawings referenced below for exact depth

FVE-193-MM
specify width when ordering

Standard Features

A	B	
•	•	Soft close (concealed hinge) doors
•	•	Leg levelers
•	•	Adjustable shelf with touch lighting above TV area
•		2 Hidden full-extension drawers behind bottom door on both side cabinets
•		LED touch lighting with 6 adj. glass shelves
•	•	Hardware = 1" Black square knob **R** (shown)

Hidden Drawers

Optional Features

A	B	
•	•	Make center unit 2 pieces

See complete options list on pg 102

FVE-191-MM
specify width when ordering

See page 206 for dimensional details.

MANHATTAN MISSION
6pc Wall Unit

Center unit available in 5 TV widths, specify when ordering.
45½" W | 50½" W | 55½" W
60½" W | 68½" W

FVE-049-MM
includes console
specify width when ordering

Special Note: complete wall unit is 4" less deep than in 2024. See dimensional drawings referenced below for exact depth

Standard Features

- Soft close (concealed hinge) doors
- Leg levelers
- Console included, bolted to side cabinets
- 1 Adj. shelf behind each console door
- Adjustable shelf below bridge
- Full hanging back behind TV area
- LED touch lighting with 3 adj. glass shelves in each side cabinet
- For wider widths – center door stays constant, side doors get wider
- Hardware = 1" Black square knob **R** (shown)

Optional Features

- Heavy duty casters (console only)

See complete options list on pg 102

See page 205 for dimensional details.

Modesto
6pc Wall Unit

Center unit available in 5 TV widths, specify when ordering.
45½" W | 50½" W | 55½" W
60½" W | 68½" W

QS White Oak · Asbury Brown

FVE-049-MD
includes console
specify width when ordering

Special Note: complete wall unit is 4" less deep than in 2024. See dimensional drawings referenced below for exact depth

Standard Features

- Soft close (concealed hinge) doors
- Leg levelers
- Console included, bolted to side cabinets
- 1 Adj. shelf behind each console door
- Adjustable shelf below bridge
- Full hanging back behind TV area
- LED touch lighting with 3 adj. glass shelves in each side cabinet
- For wider widths – center door stays constant, side doors get wider
- Hardware = Black drawer and door pull **L-1, L-2** (shown)

Optional Features

- Heavy duty casters (console only)
- Hardware = **M-1, M-2** (no up charge)

See complete options list on pg 102

See page 206 for dimensional details.

Modesto
6pc Wall Unit

Center unit available in 5 TV widths, specify when ordering.
45½" W | 50½" W | 55½" W
60½" W | 68½" W

Rustic QS White Oak · Asbury Brown

FVE-051-MD
includes console
specify width when ordering

Special Note: complete wall unit is 4" less deep than in 2024. See dimensional drawings referenced below for exact depth

Standard Features

- Soft close (concealed hinge) doors
- Leg levelers
- Console included, bolted to side cabinets
- 1 Adj. shelf behind each door
- Adjustable shelf below bridge
- Full hanging back behind TV area
- LED touch lighting with 3 adj. glass shelves in each side cabinet
- For wider widths – center door stays constant, side doors get wider
- Hardware = Black drawer and door pull **L-1, L-2** (shown)

Optional Features

- Heavy duty casters (console only)
- Hardware = **M-1, M-2** (no up charge)

See complete options list on pg 102

See page 207 for dimensional details.

Old Classic Sleigh
6pc Wall Unit

Center unit available in 5 TV widths, specify when ordering.
45½" W | 50½" W | 55½" W
60½" W | 68½" W

Oak · Michael's Cherry

FVE-058-OCS
includes console
specify width when ordering

Special Note: complete wall unit is 4" less deep than in 2024. See dimensional drawings referenced below for exact depth

Standard Features

- Soft close (concealed hinge) doors
- Leg levelers
- Console included, bolted to side cabinets
- 1 Adj. shelf behind each door
- Adjustable shelf below bridge
- Full hanging back behind TV area
- LED touch lighting with 3 adj. glass shelves in each side cabinet
- For wider widths – center door stays constant, side doors get wider
- Hardware = 1⅛", 1¾" Low profile round wood knob **C-1, C-2** (shown)

Optional Features

- Heavy duty casters (console only)

See complete options list on pg 102

See page 207 for dimensional details.

TIMBRA
6pc Wall Unit

Standard Features

- Self-positioning, soft close barn doors on top
- Soft close (concealed hinge) doors on base
- Leg levelers
- 3 pc. base is bolted together
- 1 Adj. shelf behind each door
- 2 Adj. shelves on each side, on top
- Hardware = Swedish Iron door pull **7-B** (shown)

Optional Features

- Add adjustable shelf above TV area
- 1/4" Thick, full hanging back behind TV area
- 3/4" Thick back to hang TV on
- Omit barn doors on top
- Add touch lights with glass shelves in top, side cabinets

See complete options list on pg 102

Sap Cherry · Vintage Antique

FVE-85110-TB
6pc Wall Unit
110¾" W x 18¾" D x 84¾" H
(TV area: 50½" W x 13¼" D x 42¾" H)

FVE-36110-TB · 3pc Base only
110¼" W x 18¾" D x 36" H

Optional full hanging back

See page 208 for dimensional details.

TIMBRA

6pc Wall Unit

FVE-85130-TB · 6pc Wall Unit
130¾" W x 18¾" D x 84¾" H
(TV area: 60½" W x 13¼" D x 42¾" H)

Standard Features

- Self-positioning, soft close barn doors on top
- Soft close (concealed hinge) doors on base
- Leg levelers
- 3 pc. base is bolted together
- 1 Adj. shelf behind each door
- 2 Adj. shelves on each side, on top
- Hardware = Swedish Iron door pull **7-B** (shown)

Optional Features

- Add adjustable shelf above TV area
- 1/4" Thick, full hanging back behind TV area
- 3/4" Thick back to hang TV on
- Omit barn doors on top
- Add touch lights with glass shelves in top, side cabinets

See complete options list on pg 102

Optional full hanging back

See page 208 for dimensional details.

Victorian
3pc Wall Unit

Center unit available in 4 TV widths, specify when ordering.
45½" W | 50½" W | 55½" W | 60½" W

Special Note:
complete wall unit is 4" less deep than in 2024. See dimensional drawings referenced below for exact depth

FVE-193-VS
specify width when ordering

Standard Features

A	B	
•	•	Soft close (concealed hinge) doors
•	•	Leg levelers
•	•	Adjustable shelf with touch lighting above TV area
•		2 Hidden full-extension drawers behind bottom door on both side cabinets
•		LED touch lighting with 6 adj. glass shelves
•	•	Hardware = 1¼" Oil rubbed bronze knob **S-1** (shown)

Hidden Drawers

Optional Features

A	B	
•	•	Make center unit 2 pieces

See complete options list on pg 102

FVE-191-VS
specify width when ordering

See page 206 for dimensional details.

FORKS VALLEY WOODWORKING

Better Because …

STANDARDS FOR CORNER MEDIA CONSOLES & HUTCHES

⅝" Thick dovetailed, full-extension functional drawers

Leg levelers on all legs for easy in home leveling.

¾" Raceway in back for easy wiring from shelf to shelf in all component areas. All shelves are fully adjustable.

Solid hardwood sides and tops

Corner Media Consoles & Hutches

Specially made to maximize often wasted space in corners and enhance the features of the room in which it is placed, a Forks Valley corner stand, cabinet or hutch displays (or hides) your entertainment equipment in style.

Artesa Boulder Creek CENTENNIAL
Media Corner Consoles

Standard Features

A	B	C	
•	•	•	Smoked glass
•			Smooth sliding track for all doors with simple mechanism for easy removal
•			2 Adjustable shelves behind each door
	•	•	Soft close (concealed hinge) doors with 1 adjustable shelf behind each door
	•		Hardware =1" Black knob **U** (shown)
		•	Hardware =1" Black square knob **R** (shown)

Optional Features

A	B	C	
•			Self-positioning, soft-closing sliding doors
	•	•	Blum, soft close undermount drawers
	•		Omit inlays (no up charge)
	•		Hardware = **O-1** (no up charge)

See page 209 for dimensional details.

A FVE-3060-A · Artesa corner console · 60" W x 22" D x 30¼" H

B FVE-2956-BC · Boulder Creek corner console · 56¼" W x 19¾" D x 29" H

C FVE-2956-CN · Centennial corner console · 56¼" W x 19¾" D x 29" H

Classic Mission
Media Corner Consoles

Standard Features

A	B	
•	•	Soft close (concealed hinge) doors
•	•	1 Adjustable shelf behind each door
•		Hardware =1¼" Round wood knob **A-1** (shown)
	•	Hardware =1¼" Square pyramid wood knob **B-1** (shown)

Optional Features

A	B	
•	•	Swivel
•	•	Change wood doors to smoked glass (no up charge)
•	•	Available in XL (56" wide) **FVE-033-CXL** 56" W x 22" D x 29¼" H **FVE-033-MXL** 56" W x 22" D x 29¼" H
•		Cathedral arch top doors

Cathedral arch top door option

See page 209 for dimensional details.

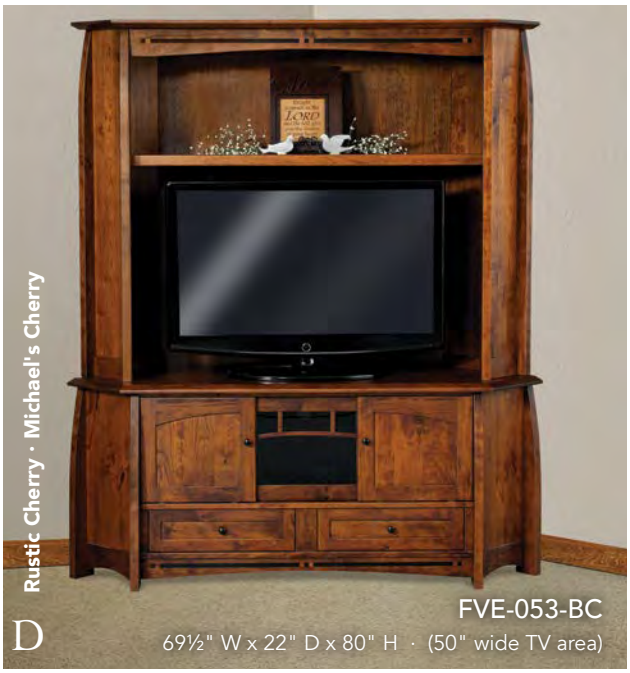

Artesa
Boulder Creek
2pc Media Corner Consoles with Hutch

Standard Features

A	B	C	D	
•	•	•	•	Smoked glass
•	•	•	•	1 Adj. shelf behind right wood door and glass door
•	•	•	•	All doors on smooth sliding track with simple mechanism for easy removal
•			•	2 Piece unit
•			•	1 Adj. shelf above TV area
•	•			Hardware = 1" Wrought Iron knob and drawer pull **P-1, P-2** (shown)
		•	•	Hardware = 1" Black knob **U** (shown)

Optional Features

A	B	C	D	
•	•	•	•	Self-positioning, soft-closing sliding door
•	•	•	•	Blum, soft close undermount drawers
•			•	LED touch light above TV area
		•	•	Omit inlays (no up charge)
		•	•	Hardware = **O-1** (no up charge)

See pages 209-210 for dimensional details.

Modesto

Old Classic Sleigh

2pc Media Corner Consoles with Hutch

Standard Features

A	B	C	D	
•	•	•	•	Smoked glass
•	•	•	•	1 Adj. shelf behind right wood door and glass door
•	•	•	•	All doors on smooth sliding track with simple mechanism for easy removal
•			•	2 Piece unit
•			•	1 Adj. shelf above TV area
•	•			Hardware = Black door and drawer pull **L-1, L-2** (shown)
		•	•	Hardware = 1⅛", 1¾" Low profile round wood knob **C-1, C-2** (shown)

Optional Features

A	B	C	D	
•	•	•	•	Self-positioning, soft-closing sliding door
•	•	•	•	Blum, soft close undermount drawers
•			•	LED touch light above TV area
		•	•	Hardware = **M-1, M-2** (no up charge)

See pages 209-210 for dimensional details.

Bookcases & Stereo Cabinets

Like the printed volumes and decorative items they lovingly display, bookcases by Forks Valley beautifully reflect the taste of their owners. In addition, our stereo cabinets provide a stylish and durable way to protect valuable equipment.

FVB-011-A-6ft
41¹/₄" W x 17¹/₄" D x 72" H

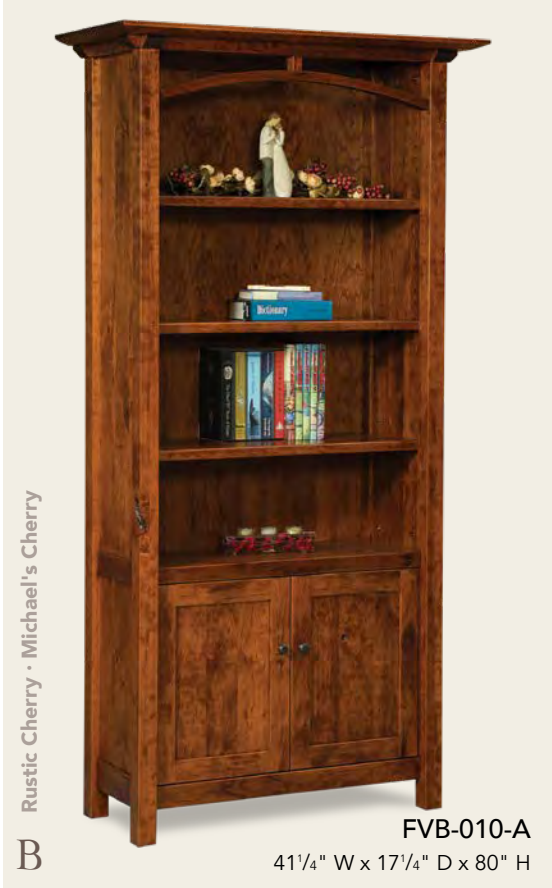

FVB-010-A
41¹/₄" W x 17¹/₄" D x 80" H

Artesa Bookcases

Standard Features

A	B	C	
•	•	•	11½" deep shelves
	•		4 Adj. shelves
•			5 Adj. shelves
		•	8 Adj. shelves
	•		Drilled for adj. shelves behind wood doors
	•		Soft close (concealed hinge) doors
		•	Self positioning, soft close sliding glass doors with leaded and antique glass
	•		Hardware = 1" Wrought iron knob **P-1** (shown)

FVB-5466-A
54" W x 17¹/₄" D x 66" H

Optional Features

A	B	C	
		•	Clear glass
		•	No doors

Also available:

FVB-011-A-5ft
41¹/₄" W x 17¹/₄" D x 60" H
4 shelves

FVB-011-A-4ft
41¹/₄" W x 17¹/₄" D x 48" H
3 shelves

QS White Oak · Golden Brown

A

FVB-011-BC-6ft
39¼" W x 16" D x 72" H

Rustic Hickory · American Antique

B

QUICK SHIP

Rustic Hickory ONLY

FVB-010-BC
39¼" W x 16" D x 80" H

Boulder Creek
Bookcases

Standard Features

A	B	C	
●	●	●	11½" deep shelves
	●	●	4 Adj. shelves
●			5 Adj. shelves
	●		Drilled for adj. shelves behind wood doors
	●		Soft close (concealed hinge) doors
	●		Hardware = 1" Black knob **U** (shown)

Rustic Cherry · Michael's Cherry

C

FVB-011-BC-5ft
39¼" W x 16" D x 60" H

Also available:

FVB-011-BC-4ft
39¼" W x 16" D x 48" H
3 shelves

FVB-011-BM-5ft
39" W x 14¾" D x 60¾" H

FVB-010-BM
39" W x 14¾" D x 80" H

Bridger Mission
Bookcases

Standard Features

A	B	C	
•	•	•	11½" deep shelves
		•	3 Adj. shelves
•	•		4 Adj. shelves
	•		Drilled for adj. shelves behind wood doors
	•		Soft close (concealed hinge) doors
	•		Hardware = 1¼" Black Stickley Mission knob **X-1** (shown)

Optional Features

A	B	C	
•	•	•	Glass doors with mullion

Optional Glass Doors

FVB-011-BM-4ft
39" W x 14¾" D x 48" H

Also available:

FVB-011-BM-6ft
39" W x 14¾" D x 72" H
5 shelves

Oak · Carbon

A

FVB-011-D-6ft
37½" W x 15" D x 72" H

Rustic Hickory · Almond

B

FVB-010-D
37½" W x 15" D x 80" H

Dover Bookcases

Standard Features

A	B	C	
•	•	•	11½" deep shelves
	•	•	4 Adj. shelves
•			5 Adj. shelves
	•		Drilled for adj. shelves behind wood doors
	•		Soft close (concealed hinge) doors
	•		Hardware = 1" Round Black knob **U** (shown)

Optional Features

A	B	C	
•	•	•	Glass doors (no mullions)

Also available:

FVB-011-D-4ft
37½"W x 15"D x 48"H
3 shelves

Brown Maple · Manchester

C

FVB-011-D-5ft
37½" W x 15" D x 60" H

FVB-011-EN-6ft
42¼" W x 14¾" D x 72" H

FVB-010-EN
42¼" W x 14¾" D x 80" H

Ensenada Bookcases

Standard Features

A	B	C	
•	•	•	11½" deep shelves
	•		4 Adj. shelves
•			5 Adj. shelves
		•	8 Adj. shelves
	•		Drilled for adj. shelves behind wood doors
	•		Soft close (concealed hinge) doors
		•	Self positioning, soft close sliding glass/ wood doors with antique glass
	•		Hardware = 1" Satin nickel knob **T-1** (shown)

FVB-5466-EN · 54" W x 16" D x 66" H

Optional Features

A	B	C	
		•	Clear glass
		•	No doors

Also available:

FVB-011-EN-5ft
42¼" W x 14¾" D x 60" H
4 shelves

FVB-011-EN-4ft
42¼" W x 14¾" D x 48" H
3 shelves

FVB-011-HH-5ft
37" W x 14¾" D x 59¾" H

FVB-010-HH
37" W x 14¾" D x 79¾" H

Hoosier Heritage Bookcases

Standard Features

A	B	C	
•	•	•	11½" deep shelves
		•	3 Adj. shelves
•	•		4 Adj. shelves
	•		Drilled for adj. shelves behind wood doors
	•		Soft close (concealed hinge) doors
	•		Hardware = 1¼" Round wood knob **A-1** (shown)

Optional Features

A	B	C	
•	•	•	Glass doors with mullion

Also available:

FVB-011-HH-6ft
37"W x 14¾"D x 71¾"H
5 shelves

FVB-011-HH-4ft
37" W x 14¾" D x 47¾" H

Rough Sawn Rustic Brown Maple · Almond

A

FVB-011-HT-6ft
35¼"W x 14⅛"D x 72⅛"H

Rough Sawn Rustic Brown Maple · American Antique

B

FVB-010-HT
35¼"W x 14⅛"D x 80⅛"H

HOUSTON
Bookcases

Standard Features

A	B	C	
•	•	•	Available in Rough Sawn Rustic Brown Maple or Rough Sawn Rustic White Oak ONLY
•	•	•	11½" deep shelves
	•	•	4 Adj. shelves
•			5 Adj. shelves
	•		Drilled for adj. shelves behind wood doors
	•		Soft close (concealed hinge) doors
	•		Hardware = Swedish Iron door pull **7-B** (shown)

Optional Features

A	B	C	
•	•	•	Glass doors (no mullions)

Also available:

FVB-011-HT-4ft
35¼"W x 14⅛"D x 48⅛"H
3 shelves

Rough Sawn Rustic Brown Maple · Harvest

C

FVB-011-HT-5ft
35¼"W x 14⅛"D x 60⅛"H

Marina
Bookcases

Standard Features

A	B	
•	•	11½" deep shelves
	•	4 Adj. shelves
•		5 Adj. shelves
	•	Drilled for adj. shelves behind wood doors
	•	Soft close (concealed hinge) doors
	•	Hardware =Satin nickel knob knob **10-A** (shown)

Optional Features

A	B	
•	•	Glass doors (no mullions)

Also available:

FVB-011-MA-5ft
33"W x 12¾"D x 60"H
4 shelves

QS White Oak · Asbury Brown

A

FVB-011-MD-6ft
36" W x 14¼" D x 72" H

QS White Oak · Asbury Brown

B

FVB-010-MD
36" W x 14¼" D x 80" H

Modesto
Bookcases

Standard Features

A	B	C	
•	•	•	11½" deep shelves
	•		4 Adj. shelves
•			5 Adj. shelves
		•	8 Adj. shelves
	•		Drilled for adj. shelves behind wood doors
	•		Soft close (concealed hinge) doors
		•	Self positioning, soft close sliding glass & wood doors with clear glass
	•		Hardware = Black door pull **L-1** (shown)

Optional Features

A	B	C	
		•	No doors

QS White Oak · Asbury Brown

C

FVB-5466-MD
54" W x 15½" D x 66" H

Also available:

FVB-011-MD-5ft
36" W x 14¼" D x 60" H
4 shelves

FVB-011-MD-4ft
36" W x 14¼" D x 48" H
3 shelves

QS White Oak · Michael's Cherry

A

FVB-011-OCS-5ft
36" W x 16" D x 60¾" H

Oak · Michael's Cherry

B

FVB-010-OCS
36" W x 16" D x 78" H

Old Classic Sleigh Bookcases

Standard Features

A	B	C	
•	•	•	11½" deep shelves
•	•		4 Adj. shelves
		•	5 Adj. shelves
	•		Drilled for adj. shelves behind wood doors
	•		Soft close (concealed hinge) doors
	•		Hardware = 1¾" Low profile round wood knob **C-2** (shown)

Optional Features

A	B	C	
•	•	•	Glass doors (no mullions)

Optional Glass Doors

QS White Oak · Asbury

C

FVB-011-OCS-6ft
36" W x 16" D x 72" H

Arts & Crafts | Clear water glass enhanced with mission caramel and green accent pieces. **LGAC**

Tulip | Water glass enhanced with mission caramel and green tulip design & beveled glass. **LGTU**

Colbran | Antique glass enhanced with beveled glass, wispy amber, mission caramel and red accent pieces. **LGCB**

Artesa
Boulder Creek
Colbran
Barrister Bookcases

Standard Features

A	B	C	
•	•	•	11½" D x 12½" H book area
•	•	•	4 doors, slide smoothly into cabinet on roller glides
•			Leaded glass **LGAC**
	•		Leaded glass **LGTU**
		•	Leaded glass **LGCB**
•			Hardware = 1" Wrought iron knob **P-1** (shown)
	•		Hardware = 1" Black knob **U** (shown)
		•	Hardware = 1" Black square knob **R** (shown)

Optional Features

A	B	C	
•	•	•	Switch leaded glass pattern (no up charge)
•	•	•	Clear, beveled glass
•	•	•	5 door, 3 door, or 2 door (add or deduct 14¼" H for each door)

Craftsman | Seedy glass enhanced with champagne and earth wine accent pieces. **LGCM**

Tulip | Water glass enhanced with mission caramel and green tulip design & beveled glass. **LGTU**

Modesto | Antique glass enhanced with mission caramel and red accent pieces. **LGMD**

FVBR-4DR-CM
40¼" W x 15" D x 64¼" H

FVBR-4DR-LA
40¾" W x 17¼" D x 64" H

Craftsman
LEXINGTON ARC
Modesto
Barrister Bookcases

FVBR-4DR-MD
37½" W x 14½" D x 63½" H

Standard Features

A	B	C	
•	•	•	11½" D x 12½" H book area
•	•	•	4 doors, slide smoothly into cabinet on roller glides
•			Leaded glass **LGCM**
	•		Leaded glass **LGTU**
		•	Leaded glass **LGMD**
•			Hardware = 1¼" Black square Stickley Mission knob **X-1** (shown)
	•		Hardware = 1" Satin Nickel knob **T-1** (shown)
		•	Hardware = 1" Black square knob **R** (shown)

Optional Features

A	B	C	
•	•	•	Switch leaded glass pattern (no up charge)
•	•	•	Clear, beveled glass
•	•	•	5 door, 3 door, or 2 door (add or deduct 14¼" H for each door)

Artesa Boulder Creek

Double Bookcases

Standard Features

A	B	
•	•	1 Piece unit
•	•	Shelves are 11½" deep
•	•	10 Adjustable shelves

Cherry · FC-106 Acres

A

FVB-012-A-6ft
Artesa Double Bookcase
74" W x 17¼" D x 72" H

Rustic Cherry · Michael's Cherry

B

FVB-012-BC-6ft
Boulder Creek Double Bookcase
72¼" W x 16" D x 72" H

Bridger Mission
Ensenada
Double Bookcases

Standard Features

A	B	
•	•	1 Piece unit
•	•	Shelves are 11½" deep
•	•	10 Adjustable shelves

Optional Features

A	B	
•		Glass doors with mullion

Optional Glass Doors

QS White Oak · Michael's Cherry

A

FVB-012-BM-6ft
Bridger Mission Double Bookcase
71¼" W x 14¾" D x 72" H

Hickory · Almond

B

FVB-012-EN-6ft
Ensenada double bookcase
74⅝" W x 14¾" D x 72" H

Hoosier Heritage
Modesto
Double Bookcases

Standard Features

A	B	
•	•	1 Piece unit
•	•	Shelves are 11½" deep
•	•	10 Adjustable shelves

Optional Features

A	B	
•	•	Glass doors with mullion

Oak · Nutmeg

A

FVB-012-HH-6ft
Hoosier Heritage double bookcase
67¾" W x 14¾" D x 71¾" H

QS White Oak · Asbury Brown

B

FVB-012-MD-6ft
Modesto double book case
68½" W x 14¼" D x 72" H

Optional Glass Doors

QS White Oak · Golden Brown

A

FVE-026-OCS
Old Classic Sleigh
stereo cabinet
24¼" W x 20¼" D x 60¾" H

Oak · Medium Walnut

B

FVE-026-M
Mission stereo cabinet
26¾" W x 17¾" D x 48¾" H

Oak · Light Walnut

C

FVE-026-C
Classic stereo cabinet
27¼" W x 18" D x 45¾" H

Classic, Mission and *Old Classic Sleigh* Stereo Cabinets

Standard Features

A	B	C	
•	•	•	Soft close (concealed hinge) doors
•	•	•	Smoked glass
•			5 Adjustable shelves
	•	•	4 Adjustable shelves
•			Hardware = 1¾" Low profile round wood knob **C-2** (shown)
	•		Hardware =1¼" Square pyramid wood knob **B-1** (shown)
		•	Hardware = 1¼" round wood knob **A-1** (shown)

See page 210 for dimensional details.

FORKS VALLEY WOODWORKING

Better Because . . .

STANDARDS FOR OFFICE FURNITURE

Dimmable LED strip lighting in work area and open shelf area is standard on most desk hutch tops

7872L & 7878L desk tops have mitered corners with tenon fitted joints and latches to lock together

All wood file rails built into file drawer boxes, except FVL-2144s

1" Thick solid wood pullout work space 14" W x 17" D (one each side)

FVL-2144 Drawers come with 2 sets of black aluminum file rails with slots for standard or legal files

Leg Levelers on all legs for easy in home leveling

⅝" Thick dovetailed, full extension functional drawers

OPTIONS FOR OFFICE FURNITURE

**specify option location when ordering, use spec. sheet on pg. 211*

TV 2802 Pop-up power station; 2 outlets, 1 USB, 1 micro USB*

LK Add lock to any drawer, single or gang locks

WG 2" Wooden grommets in any desk top*

Dock 950 Wireless phone charger (QI compliant)*

631.20.310 Spiral cable guide for any writer's desk

TVSP3802-F Add surface-mounted power station to any desk, 3 outlets,1 USB, 1 micro USB*

5" WKH Add 5"to kneehole width, this adds 5" to overall desk width (standard kneehole is 24½" W x 25" H)

OTPD Organizer tray in pencil drawer

Dock-5-BK Add power station (5 outlets) mounted on a wooden platform, on the back panel, 12" underneath the top*

KBPD Keyboard pullout drawer on any desk with black non/slip mat 21" W x 13" D x 2½" H

Dock-702-BK Pop-up power station; 2 outlets, 1 USB, 1 Micro USB*

Home Office & Business Furnishings

Unmatched comfort, maximum functionality, heirloom-quality construction, natural hardwood grains enriched by a choice of fine finishes and artisan styling true to the Mission, Arts & Crafts or Modern designs perfected by traditional woodworkers…this is office furniture the Forks Valley way … your way.

OPTIONS

Electric lift mechanism (made in USA) for desktop. Top lifts from 31" H to 49" H. 200lb. weight capacity. Adds 6" to width (in kneehole area) and keyboard pullout tray. Available on FVD-2849, FVD-2865, FVD-3365, or FVD-3367 desks; add code **S/S** after standard product code.

Add electric lift mechanism to any 7878L desks; add code **S/S** after standard product code.

LIT-(color) 1¼" thick top with genuine leather inserts (shown with Mushroom leather) on any FVD-2849, FVD-2865, FVD-3365, FVD-3367, or FVD-3371 desks. 4 colors to choose from (please specify when ordering)

POSD Add push-to-open, secret drawer with black felt bottom (12"W x 14¾"D x 2"H), on any desk, along top of dawer bank instead of writing pullout.

USBPD Double USB port charging station with black non/slip mat inside pencil drawer on any desk

Blum soft close undermount slides on drawers

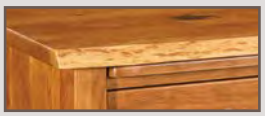

1¼" thick Live Edge top on any office piece; add code **LET** after standard product code.

Change standard top to Ocean Wave Edge top; add code **OWE** after standard product code.

Black (**BLK-LWP**) or Brown (**BRWN-LWP**) leather writing pad 15" x 23"

WRITER'S DESKS

For sizes & standard features, see desk details on each collection's pages

FVD-2654-GR
Grant

FVD-2654-A
Artesa

FVD-2654-BC
Boulder Creek

FVD-420-BC
Boulder Creek

FVD-3065-CM
Craftsman

WRITER'S DESKS

For sizes & standard features, see desk details on each collection's pages

FVD-2654-CM-S/S
Craftsman

FVD-2654-GR-S/S
Grant

FVD-430-PR
Paris

FVD-2654-CM
Craftsman

FVD-2654-EN
Ensenada

FVD-420-HT
Houston

FVD-2654-ST
Saratoga

FVD-2654-VT
Ventura

Artesa OFFICE COLLECTION

Looking at the Artesa office, you might think it is simply striking…and it is…but it is so much more. Writing pullouts, deep file drawers, an optional keyboard drawer and thoughtfully planned storage space all work together to add organization and efficiency to your personal work environment.

Artesa
Hutch & Desks

Standard Features

A	B	C	D	E	
●	●	●	●	●	Solid, 4-sided tapered legs
●	●	●	●	●	Kneehole 24½" W, with pencil drawer
●	●	●	●		1 File drawer, each side
●	●	●	●		Pullout above drawers, each side
●	●		●		Unfinished back
		●		●	Finished back
●					Soft close (concealed hinge) doors
●					Dimmable LED touch lighting
●					2 Adj. shelves behind right door, 1 behind left door
●					Adjustable glass shelf in center
●	●	●	●	●	Hardware = Wrought Iron knob and drawer pull **P-1, P-2** (shown)

Optional Features

A	B	C	D	E	
●	●	●	●		Split top drawer into 2 smaller drawers
			●		Finished back

See complete options list on pgs 142-143

A FVD-2865-HT-A
2pc hutch & desk base
65" W x 28¼" D x 81" H

B FVD-2865-A
desk base
65" W x 28¼" D x 31" H

C FVD-3365-A
curved top desk base
65" W x 33" D x 31" H

Finished back side

D FVD-2849-A
49½" W x 28¼" D x 31" H

E FVD-2654-A · Writer's desk
54" W x 26" D x 31" H

See page 213 for dimensional details.

Rustic Cherry · Michael's Cherry

FVD-3371-A-S/S
sit-to-stand curved top desk
71" W x 33" D x 31" - 49" H

Artesa Desk

Finished back side

Standard Features

- Kneehole 30½" W, with keyboard pull-out drawer
- Solid, 4-sided tapered legs
- Finished back side
- 1 File drawer, each side
- Height switch with 3 programmable settings for lift mechanism
- Electric lift mechanism (made in the USA) for desk top – top lifts from 31" H - 49" H; 200lb. weight capacity on lift
- Hardware = Wrought Iron drawer pull **P-2** (shown)

1¼" thick top with genuine leather inserts

Artesa Hutch & L Desks

Standard Features

A	B	C	
•	•	•	Top has mitered corners
•	•	•	Solid, 4-sided tapered legs
•	•	•	Keyboard pull-out drawer on left; pencil drawer on right
•	•	•	Pullout above drawers, each side
•	•	•	1 File drawer, each side
•	•		Kneehole 30½" W, each side
•	•		Unfinished back (left side), finished back (right side)
		•	Finished back
•	•		Grommet in top (hutch side)
•			Soft close (concealed hinge) doors
•			Dimmable LED touch lighting (warm white) in work area and open shelf area
•			1 Adj. shelf behind small doors, 2 behind large door on right
•			Adjustable glass shelf in center
•			Work area = 47¼" W x 13" D x 22" H
•	•	•	Hardware = 1" Wrought Iron knob and drawer pull **P-1, P-2** (shown)

Optional Features

A	B	C	
•	•	•	Reverse sides (no up charge)
•	•	•	Split top drawer into 2 smaller drawers
	•		Finished back side on left side of desk
		•	Unfinished back

See complete options list on pgs 142-143

See page 214 for dimensional details.

A Rustic Cherry · Michael's Cherry

FVD-7878L-HT-A · 3pc desk base & hutch
desk: 78" W (left & right side) x 30" D x 31" H
hutch: 73½" W x 18½" D x 50" H

B Rustic Cherry · Michael's Cherry

FVD-7878L-A · 2pc L desk
78" W (left & right side) x 30" D x 31" H

C Rustic Cherry · Michael's Cherry

FVD-7872L-A
2pc L desk
78" W (left side) l
72" W (right side)
x 30" D x 31" H

Finished back side

Rustic Cherry · Michael's Cherry

A

FVBB-2590-HT-A · 4pc hutch & base
90" W x 24¾" D x 84" H

Rustic Cherry · Michael's Cherry

B

FVF-2DWR-A
24¼" W x 28¼" D x 31" H

Also available:
FVF-3DWR-A
3 Drawer File Cabinet, 46" H

Rustic Cherry · Michael's Cherry

C

FVF-2DWR-A-F
24¼" W x 30" D x 31" H

Also available:
FVF-3DWR-A-F
3 Drawer File Cabinet
with Finished Back, 46" H

Artesa

4pc Backbar, Base & File Cabinets

Standard Features

A	B	C	D	
•	•	•	•	Solid, 4-sided tapered legs
•	•		•	Unfinished back
		•		Finished back
•				2 Adj. shelves in each section of hutch
•			•	1 Adj. shelf behind each door
•			•	Soft close (concealed hinge) doors
•				Hutch is 3 pcs, bolted together
	•	•		2 Std. file drawers
•			•	Hardware = 1" Wrought Iron knob **P-1** (shown)
	•	•		Hardware = Wrought Iron drawer pull **P-2** (shown)

Rustic Cherry · Michael's Cherry

D

FVBB-2590-A · 1pc base
90" W x 24¾" D x 31" H

See complete options list on pgs 142-143
See page 218 for dimensional details.

Artesa

2pc Lateral File Cabinet with Hutch & Lateral File Credenza

Standard Features

A	B	C	
•	•	•	2 Lateral file drawers
•	•		2 Sets of hanging file rails per drawer
•			2 Piece unit
•			2 Adj. shelves in hutch area, 11½" deep
		•	Soft close (concealed hinge) doors
		•	1 Adj. shelf behind doors
•	•	•	Hardware = Wrought Iron knob and drawer pull **P-1**, **P-2** (shown)

Optional Features

A	B	C	
•	•		Blum, soft close undermount drawers

See complete options list on pgs 142-143

FVL-2144 Drawers come with 2 sets of black aluminum file rails with slots for standard or legal files

Boulder Creek
OFFICE COLLECTION

Gently curved legs, inlays, and arched skirts distinguish the Boulder Creek collection. This contemporary look adds a touch of warmth and classic style to any office. Hand made by skilled Amish craftsmen, Boulder Creek furniture is available in a choice of sustainably harvested hardwoods.

Boulder Creek
Desks

Standard Features

A	B	C	D	
●	●	●		Kneehole 24½" W, with pencil drawer
	●	●		Black wood inlays
●	●			Finished back side
		●	●	Unfinished back
		●		Curved, reversed panel sides
		●		Pullout above drawers
		●		1 File drawer right side
			●	Inside box (removable) with drawer and paper slots
			●	Soft close, lift up doors. Inside monitor space: 23" W x 12" D x 16½" H
●	●	●	●	Hardware = 1" Black knob **U** (shown)

Optional Features

A	B	C	D	
●	●	●	●	Hardware = **O-1** (no up charge)
		●	●	Finished back
●	●	●		Omit inlays (no up charge)

See complete options list on pgs 142-143

Scan to view video of soft close lift up doors

See page 212 for dimensional details.

A FVD-420-BC writer's desk
54" W x 26" D x 31" H

B FVD-2654-BC writer's desk
54" W x 26" D x 31" H

C FVD-2849-BC desk base
49" W x 27½" D x 31" H

D FVDH-600-BC hutch top
44½" W x 16½" D x 22" H

Finished back side

FVD-3371-BC-S/S
sit-to-stand curved top desk
71" W x 33" D x 31"- 49" H

Boulder Creek
Desk

Standard Features

- Kneehole 30½" W, with keyboard pull-out drawer
- Black wood inlays
- Curved, reversed panel sides
- Finished back side
- 1 File drawer, each side
- Height switch with 3 programmable settings for lift mechanism
- Electric lift mechanism (made in the USA) for desk top – top lifts from 31" H - 49" H; 200lb. weight capacity on lift
- Hardware = 1" Black knob **U** (shown)

Optional Features

- Hardware = **O-1** (no up charge)
- Omit inlays (no up charge)

See complete options list on pgs 142-143

Boulder Creek
Hutch & Desks

Standard Features

A	B	C	D	
●	●	●	●	Black wood inlays
●	●	●	●	Curved, solid reversed-panel sides
●	●	●	●	Kneehole 24½" W, with pencil drawer
●	●	●	●	1 File drawer, each side
●	●	●	●	Pullout above drawers, each side
●	●	●		Unfinished back
			●	Finished back
●				Soft close (concealed hinge) doors
●				Dimmable LED touch lighting
●				2 Adj. shelves behind each door; 1 adj. glass shelf in center
		●		4" deep drawers with stop (prevents drawers from falling out)
		●		Top slots = 4½" W x 9¾" D x 5" H; Side slots = 11½" W x 9¾" D x 4¼" H; all dividers removable
●	●	●	●	Hardware = 1" Black knob **U** (shown)

Optional Features

A	B	C	D	
●	●	●	●	Hardware = **O-1** (no up charge)
		●		Finished back
●	●	●	●	Omit inlays (no up charge)

See complete options list on pgs 142-143

FVD-2865-DT-BC removable dividers detail

See page 213 for dimensional details.

A **FVD-2865-HT-BC**
2pc hutch & desk base
65" W x 27½" D x 79¾" H

B **FVD-2865-BC**
desk base
65" W x 27½" D x 31" H

C **FVD-2865-DT-BC**
Desk: 65" W x 27½" D x 31" H · Topper: 55" W x 12" D x 17" H

D Finished back side

FVD-3365-BC
curved top desk base
65" W x 33" D x 31" H

Boulder Creek

L Desks

Standard Features

A	B	
•	•	Black wood inlays
•	•	Curved, reversed panel sides
•	•	Keyboard pull-out drawer on left; pencil drawer on right
•	•	Finished back
•		File drawer on left side
	•	Top has mitered corners
	•	Pullout above drawers
•	•	1 File drawer, each pedestal
•	•	Hardware = 1" Black knob **U** (shown)

Optional Features

A	B	
•	•	Omit inlays (no up charge)
•	•	Reversed sides (no up charge)
	•	Unfinished back
•	•	Hardware = **O-1** (no up charge)

See complete options list on pgs 142-143

See pages 212 and 214 for dimensional details.

FVD-7882L-BC-S/S
2 pc sit-to-stand L desk
78" W (left side)
82" W (right side)
30" D x 31"- 49" H

Boulder Creek
L Desk

Standard Features

- Black wood inlays
- Curved, reversed panel sides
- Kneehole 30½" W on left side, 34½" W on right side
- Keyboard pull-out drawer on right; pencil drawer on left
- Finished back on right, unfinished back on left
- Grommet in top, on right side
- 1 File drawer, each side
- Pullout above drawers on left side
- Height switch with 3 programmable settings for lift mechanism
- Electric lift mechanism (made in the USA) for desk top – top lifts from 31" H - 49" H; 200lb. weight capacity on lift
- Hardware = 1" Black knob **U** (shown)

Optional Features

- Omit inlays (no up charge)
- Reversed sides (no up charge)
- Finished back on left side
- Hardware = **O-1** (no up charge)

See complete options list on pgs 142-143

Finished back side

See page 212 for dimensional details.

Boulder Creek
Hutch & L Desk

Standard Features

A	B	
•	•	Black wood inlays
•	•	Curved, reversed panel sides
•	•	Kneehole 30½" W, each side
•	•	Keyboard pull-out drawer on left; pencil drawer on right
•	•	Pullout above drawers, each side
•	•	1 File drawer, each side
•	•	Unfinished back (left side), finished back (right side)
•	•	Grommet in top (hutch side)
•		Soft close (concealed hinge) doors
•		Dimmable LED touch lighting (warm white) in work area and open shelf area
•		1 Adj. shelf behind small doors, 2 behind large door on right
•		Adjustable glass shelf in center
•		Work area = 47¼" W x 13" D x 22" H
•	•	Hardware = 1" Black round knob **U** (shown)

QS White Oak · Golden Brown

A

FVD-7878L-HT-BC
3pc desk base & hutch
desk: 78" W (left & right side) x 30" D x 31" H
hutch: 73" W x 17¼" D x 48¾" H

Optional Features

A	B	
•	•	Omit inlays (no up charge)
•	•	Reverse sides (no up charge)
	•	Finished back side on left side of desk
•	•	Hardware = **O-1** (no up charge)

See complete options list on pgs 142-143

QS White Oak · Golden Brown

B

FVD-7878L-BC · 2pc desk base
78" W (left & right side) x 30" D x 31" H

See page 214 for dimensional details.

QS White Oak · Golden Brown

A

FVBB-2590-HT-BC · 4pc hutch & base
90" W x 25" D x 84" H

QS White Oak · Golden Brown

B

FVF-2DWR-BC
23" W x 28" D x 31" H

Also available:
FVF-3DWR-BC
3 Drawer File Cabinet, 43¾" H

QS White Oak · Golden Brown

C

FVF-2DWR-BC-F
23" W x 30" D x 31" H

Also available:
FVF-3DWR-BC-F
3 Drawer File Cabinet
with Finished Back, 43¾" H

Boulder Creek

4pc Backbar & File Cabinets

QS White Oak · Golden Brown

D

FVBB-2590-BC · 1pc base
90" W x 25" D x 31" H

Standard Features

A	B	C	D	
•	•	•	•	Black wood inlays and curved, solid reversed panel sides
	•	•		2 Std. file drawers
•	•		•	Unfinished back
		•		Finished back
•	•			1 Adj. shelf behind each door
•	•			Soft close (concealed hinge) doors
•				Hutch is 3 pcs, bolted together
•				2 Adj. shelves in each section of hutch
•	•	•	•	Hardware = 1" Black knob **U** (shown)

Optional Features

A	B	C	D	
•	•	•	•	Omit inlays (no up charge)
•	•	•	•	Hardware = **O-1** (no up charge)

See complete options list on pgs 142-143

See page 218 for dimensional details.

FVL-2144-HT-BC
45½" W x 19¾" D x 79¾" H

FVL-2144-BC
45½" W x 19¾" D x 31" H

FVLC-063-BC
63" W x 19¾" D x 31" H

Boulder Creek

2pc Lateral File Cabinet with Hutch & Lateral File Credenza

Standard Features

A	B	C	
•	•	•	2 Lateral file drawers
•	•	•	Black wood inlays
•	•		2 Sets of hanging file rails per drawer
•			2 Piece unit
•			2 Adj. shelves in hutch area, 11½" deep
		•	Soft close (concealed hinge) doors
		•	1 Adj. shelf behind doors
•	•	•	Hardware = 1" Black knob **U** (shown)

Optional Features

A	B	C	
•	•	•	Omit inlays (no up charge)
•	•		Blum, soft close undermount drawers
•	•	•	Hardware = **O-1** (no up charge)

See complete options list on pgs 142-143

FVL-2144 Drawers come with 2 sets of black aluminum file rails with slots for standard or legal files

Bridger Mission
Desks

Standard Features

A	B	
•	•	Kneehole 24½" W, with pencil drawer
•	•	Finished back
•	•	Pullout above drawer bank
•	•	Finished back
•	•	2 Drawers on right side
•		File drawer on left side (looks like double drawers)
•	•	Hardware = Black Stickley Mission drawer pull **X-2** (shown)

Optional Features

See complete options list on pgs 142-143

Standard pullouts above drawer banks

Centennial
Hutch & L Desk

Standard Features

A	B	
•	•	Kneehole 28½" W, each side
•	•	Keyboard pull-out drawer on left; pencil drawer on right
•	•	Pullout above drawers, each side
•	•	1 File drawer, each side
•	•	Unfinished back (left side), finished back (right side)
•	•	Grommet in top (hutch side)
•		Soft close (concealed hinge) doors
•		Dimmable LED touch lighting (warm white) in work area
•		1 Adj. shelf behind small doors,
•		Work area = 62½" W x 12¼" D x 18" H
•	•	Hardware = 1" Black square knob **R** (shown)

Optional Features

A	B	
•	•	Reverse sides (no up charge)
	•	Finished back side on left side of desk

See complete options list on pgs 142-143

Oak · Vintage Antique

A

FVD-7272L-HT-CN
3pc desk base & hutch
desk: 72" W (left & right side) x 26" D x 31" H
hutch: 68" W x 14" D x 41" H

Oak · Vintage Antique

B

FVD-7272L-CN · 2pc desk base
72" W (left & right side) x 26" D x 31" H

See page 216 for dimensional details.

Colbran
OFFICE COLLECTION

Dream. Plan. Communicate with the chaotic outside world. Inside, you'll be working in a grounded, stress-free environment when you add Colbran furniture to your home or office.

Colbran
Desks & Filing Cabinets

Standard Features

A	B	C	D	E	
●	●	●	●	●	Solid tapered sides
●	●	●			Kneehole 24½" W, with pencil drawer
●	●	●			1 File drawer, each side
			●	●	2 Std. file drawers
●	●	●			Pullout above drawers, each side
●		●	●		Unfinished back
	●			●	Finished back
	●				Curved top
●	●	●	●	●	Hardware = 1" Black square knob **R** (shown)

Optional Features

A	B	C	D	E	
●	●	●			Split top drawer into 2 smaller drawers
		●			Finished back

See complete options list on pgs 142-143

Also available:

FVL-2144-CB
2 Drawer Lateral File Cabinet
45½" W x 19¾" D x 31" H

FVLC-063-CB
Lateral File Credenza
63" W x 19¾" D x 31" H

FVD-2865-CB
67" W x 28¼" D x 31" H

FVD-3365-CB
curved top desk base
67" W x 33" D x 31" H

FVD-2849-CB
50¾" W x 28¼" D x 31" H

FVF-2DWR-CB
24¼" W x 28¼" D x 31" H

Also available:
FVF-3DWR-CB
3 Drawer File Cabinet, 44¼" H

FVF-2DWR-CB-F
24¼" W x 30" D x 31" H

Also available:
FVF-3DWR-CB-F
3 Drawer File Cabinet
with Finished Back, 44¼" H

Craftsman
Desks

Standard Features

A	B	C	
•	•	•	1" solid top
•	•	•	Pencil drawer in center
		•	1 Pencil drawer each side
•	•	•	Finished back side
•			Electric lift mechanism (made in the USA) for desk top – top lifts from 28" H - 46" H; 200lb. weight capacity on lift
•			Height switch with 3 programmable settings for lift mechanism
•	•	•	Hardware = Black Stickley Mission drawer pull **X-2** (shown)

Optional Features

A	B	C	
		•	Omit tenons (no up charge)

See complete options list on pgs 142-143

Optional power station on back of desk
TVSP3802-F

Oak · Mineral

FVD-2654-CM-S/S
Electric Sit-to-Stand Writer's Desk
54" W x 26" D x 28"-46" H

A

FVD-2654-CM
Writer's Desk (no lift)
54" W x 26" D x 31" H

Oak · Mineral

B

Rustic Cherry · Michael's Cherry

FVD-3065-CM
writer's desk
65" W x 30" D x 31" H

Finished back side

C

DOVER OFFICE COLLECTION

The Dover Collection adds a quiet elegance to any business or home office. Details like raised-look side panels, radiused corners, and understated arches inspire productive thoughts while reflecting your success. And, with so many available options, this upscale set easily fits the style of its surroundings and the needs of its user.

DOVER
Desks

Standard Features

A	B	C	
●	●	●	Pencil drawer
●	●	●	Kneehole 24½" W
●	●	●	1 File drawer, each side
●	●		Unfinished back
		●	Finished back
●	●	●	Hardware = 1" Black knob **U** (shown)

Optional Features

A	B	C	
●	●	●	Flat panel sides, no grooves (no up charge)
●	●		Finished back
●	●	●	Hardware = **O-1** (no up charge)

See complete options list on pgs 142-143

Rustic Hickory · Almond

A

FVD-2865-D
65" W x 27¼" D x 30⅞" H

Oak · Carbon

B

FVD-2849-D
48½" W x 27¼" D x 30⅞" H

Rustic Hickory · Almond

C

FVD-3065-D
65" W x 30" D x 30⅞" H

Back view

DOVER

Hutch, L Desk & Lateral File Credenza

Standard Features

A	B	C	
•			Kneehole 27" W, each side
•			Keyboard pull-out drawer on left; pencil drawer on right
•			1 File drawer, each side
		•	2 Lateral file drawers
•			Unfinished back (left side), finished back (right side)
•			Grommet in top (hutch side)
	•	•	Soft close (concealed hinge) doors
	•	•	1 Adj. shelf behind doors
	•		Dimmable LED touch lighting (warm white) in work area
	•		Work area = 62½" W x 12¼" D x 18" H
•	•	•	Hardware = 1" Black Round knob **U** (shown)

Optional Features

A	B	C	
•	•	•	Reverse sides (no up charge)
•			Finished back side on left side of desk

See complete options list on pgs 142-143

A FVD-515-D
2pc desk base
72" W (left & right side) x 26" D x 30⅞" H

B FVDH-620-D
hutch
70¼" W x 14¾" D x 41" H

A FVD-515-D
2pc desk base
72" W (left & right side) x 26" D x 30⅞" H

C FVLC-675-D
63" W x 19¼" D x 30⅞" H

See page 215 for dimensional details.

Ensenada OFFICE COLLECTION

Whether catching up on household finances or working on a big project with a tight deadline, Ensenada office furniture, with its clean, graceful lines, inspires relaxed productivity.

Ensenada Desks

Standard Features

A	B	C	D	
●	●	●	●	Pencil drawer
●	●	●	●	1" Solid top
●	●	●	●	Beveled edge on legs
	●	●	●	Kneehole 24½" W
	●	●	●	1 File drawer, each side
	●	●	●	Pullout above drawers, each side
	●	●		Unfinished back
●			●	Finished back
			●	Curved top
●	●	●	●	Hardware = Satin Nickel drawer pull **T-2** (shown)

Optional Features

A	B	C	D	
		●		Finished back
	●	●	●	Split top drawer into 2 smaller drawers
●	●	●	●	Hardware = **1-B** (no up charge)

See complete options list on pgs 142-143

Oak · Driftwood

A

FVD-2654-EN · writer's desk
54" W x 26" D x 31" H

Sap Cherry · Asbury

B

FVD-2865-EN
67" W x 28½" D x 31" H

Sap Cherry · Asbury

C

FVD-2849-EN
50¾" W x 28½" D x 31" H

Back view

Sap Cherry · Asbury

D

FVD-3365-EN
curved top desk base
67" W x 33" D x 31" H

Ensenada Hutch & L Desk

Standard Features

A	B	C	
•	•		Kneehole 30½" W, each side
•	•	•	Keyboard pull-out drawer on left; pencil drawer on right
•	•		Pullout above drawers, each side
•	•		1 File drawer, each side
		•	1 File drawer, left side
•	•		Unfinished back (left side), finished back (right side)
		•	Finished back
•	•		Grommet in top (hutch side)
•			Soft close (concealed hinge) doors
•			Dimmable LED touch lighting (warm white) in work area and open shelf area
•			1 Adj. shelf behind small doors, 2 behind large door on right
•			Adjustable glass shelf in center
•			Work area = 47¼" W x 13" D x 22" H
•	•	•	Hardware = 1" Satin Nickel knob and drawer pull **T-1, T-2** (shown)

Optional Features

A	B	C	
•	•	•	Reverse sides (no up charge)
•	•	•	Split top drawers into 2 small drawers
	•		Finished back side on left side of desk
•	•	•	Hardware = **1-A, 1-B** (no up charge)

See complete options list on pgs 142-143

Sap Cherry · Asbury

A

FVD-7878L-HT-EN
3pc desk base & hutch
desk: 78" W (left & right side) x 30" D x 31" H
hutch: 74½" W x 16" D x 48¾" H

Sap Cherry · Asbury

B

FVD-7878L-EN
2pc desk base
78" W (left & right side) x 30" D x 31" H

Oak · Vintage Antique

C

Finished back side

FVD-6660L-EN
2pc L desk
66" W (left side)
60" W (right side)
26" D (left side)
20" D (right side) x 31" H

See page 214 for dimensional details.

Ensenada

File Cabinets & Lateral File Credenza

Standard Features

A	B	C	D	
•	•	•	•	Beveled edge on legs
•		•	•	Unfinished back
	•			Finished back
•	•			2 Std. file drawers
		•	•	2 Lateral file drawers
			•	Soft close (concealed hinge) doors
			•	1 Adj. shelf behind doors
•	•	•	•	Hardware = Satin Nickel drawer pull **T-2** (shown)

Optional Features

A	B	C	D	
		•		Blum, soft close undermount drawers
•	•	•	•	Hardware = **1-B** (no up charge)

See complete options list on pgs 142-143

FVL-2144 Drawers come with 2 sets of black aluminum file rails with slots for standard or legal files

Sap Cherry · Asbury

A

FVF-2DWR-EN
24¼" W x 28½" D x 31" H

Also available:
FVF-3DWR-EN
3 Drawer File Cabinet, 44¾" H

Sap Cherry · Asbury

B

FVF-2DWR-EN-F
24¼" W x 29¾" D x 31" H

Also available:
FVF-3DWR-EN-F
3 Drawer File Cabinet with Finished Back, 44¾" H

Sap Cherry · Charwood

C

FVL-2144-EN
45½" W x 19¾" D x 34" H

Sap Cherry · Asbury

D

FVLC-063-EN
63" W x 19¾" D x 34" H

Grant
Desks

Standard Features

A	B	
•	•	1" solid top
•	•	Pencil drawer
•	•	Finished back side
•		Electric lift mechanism (made in the USA) for desk top – top lifts from 28" H - 46" H; 200lb. weight capacity on lift
•		Height switch with 3 programmable settings for lift mechanism
•	•	Hardware = Black Stickley Mission drawer pull **X-2** (shown)

Optional Features

See complete options list on pgs 142-143

Optional power station on back of desk
TVSP3802-F

Oak · Michael's Cherry w/burnished edges

A FVD-2865-HT-GR
2pc hutch & desk base
64¼" W x 28½" D x 79¾" H

B FVD-2865-GR
desk base
64¼" W x 28½" D x 31" H

Rustic Cherry · Michael's Cherry

C FVD-3365-GR
curved top desk base
64¼" W x 33" D x 31" H

Finished back side

Rustic Cherry · Michael's Cherry

D FVD-2849-GR
47¾" W x 28½" D x 31" H

Grant

Hutch,Desks & Filing Cabinets

Rustic Cherry · Michael's Cherry

E FVF-2DWR-GR
21" W x 28½" D x 31" H

Rustic Cherry · Michael's Cherry

F FVF-2DWR-GR-F
21" W x 30" D x 31" H

Standard Features

A	B	C	D	E	F	
•	•	•	•			Kneehole 24½" W, with pencil drawer
•	•	•	•			1 File drawer, each side
				•	•	2 Std. file drawers
•	•	•	•			Pullout above drawers, each side
•	•		•	•		Unfinished back
		•			•	Finished back
•						Soft close (concealed hinge) doors
•						Dimmable LED touch lighting
•						2 Adj. shelves behind right door, 1 behind left door
•						Adjustable glass shelf in center
•	•	•	•	•	•	Hardware = Black Stickley Mission drawer pull and knob **X-1, X-2** (shown)

Optional Features

A	B	C	D	E	F	
	•		•			Finished back

See complete options list on pgs 142-143

See page 213 for dimensional details.

Grant

Hutch, L Desk & Lateral File Credenza

Standard Features

A	B	C	
•	•		Kneehole 30½" W, each side
•	•		Keyboard pull-out drawer on left; pencil drawer on right
•	•		Pullout above drawers, each side
•	•		1 File drawer, each side
		•	2 Lateral file drawers
•	•		Unfinished back (left side), finished back (right side)
•	•		Grommet in top (hutch side)
•		•	Soft close (concealed hinge) doors
•			Dimmable LED touch lighting (warm white) in work area and open shelf area; adjustable glass shelf in center
•			1 Adj. shelf behind small doors, 2 behind large door on right
		•	1 Adj. shelf behind doors
•			Work area = 47¼" W x 13" D x 22" H
•	•	•	Hardware = 1¼" Black Stickley Mission knob and drawer pull **X-1, X-2** (shown)

Optional Features

A	B	C	
•	•		Reverse sides (no up charge)
	•		Finished back side on left side of desk

See complete options list on pgs 142-143

See page 214 for dimensional details.

Rustic Cherry · Michael's Cherry

A

FVD-7878L-HT-GR
3pc desk base & hutch
desk: 78" W (left & right side) x 30" D x 31" H
hutch: 72¼" W x 16½" D x 48¾" H

Rustic Cherry · Michael's Cherry

B

FVD-7878L-GR
2pc desk base
78" W (left & right side) x 30" D x 31" H

Rustic QS White Oak · Asbury Brown

C

FVLC-063-GR
63¼" W x 19¾" D x 31" H

Also available:

FVL-2144-GR
2 Drawer Lateral File Cabinet
42¼" W x 19¾" D x 31" H

HOUSTON

OFFICE COLLECTION

Rugged yet classic characteristics of the Houston Office Collection include planked-look doors, distressed wood with rough sawn scars and antiqued pulls. Surround yourself with comfortable office pieces that inspire you to get down to business and give you all the efficiency features you need to easily get the job done.

HOUSTON
Desks

Standard Features

A	B	C	
●	●	●	Available in Rough Sawn Rustic Brown Maple and Rough Sawn Rustic White Oak ONLY
●	●	●	1⅛" smooth solid top
●	●	●	Kneehole 24½" W, with pencil drawer
	●	●	1 File drawer in each pedestal
●		●	Finished back
	●		Unfinished back
●	●	●	Hardware = Swedish Iron drawer pull **7-B** (shown)

Optional Features

A	B	C	
●	●	●	Rough sawn top (no upcharge)
●	●	●	Wooden pegs in legs
	●	●	Black or brown leather writing pad 15" x 23" (lays on top)

See complete options list on pgs 142-143

Optional black or brown leather writing pad (15" x 23")

Optional wooden pegs

Rough Sawn Rustic Brown Maple · Bel Air

A

FVD-420-HT · writer's desk
54" W x 26" D x 31¼" H

Rough Sawn Rustic White Oak · Bel Air w/#10 Low Sheen

B

FVD-2865-HT
65½" W x 28¼" D x 31¼" H

Rough Sawn Rustic White Oak · Bel Air w/#10 Low Sheen

C

FVD-3365-HT
65½" W x 31" D x 31¼" H

HOUSTON

Hutch, L Desk & Lateral File Credenza

Standard Features

A	B	C	
•	•	•	Available in Rough Sawn Rustic Brown Maple and Rough Sawn Rustic White Oak ONLY
•	•	•	1⅛" Smooth solid top
•			Kneehole 30½" W, each side
•			Keyboard pull-out drawer on left; pencil drawer on right
•			1 File drawer, each side
		•	2 Lateral file drawers
•			Unfinished back (left side), finished back (right side)
•			Grommet in top (hutch side)
	•	•	Soft close (concealed hinge) doors
		•	1 Adj. shelf behind doors
	•		1 Adj. shelf behind small door, 2 behind large door on right, removable dividers for paper slots in hutch
	•		Dimmable LED touch lighting (warm white) in work area
	•		Work area = 47¼" W x 13" D x 22" H
•	•	•	Hardware = Swedish Iron drawer pull **7-B** (shown)

Optional Features

A	B	C	
•		•	Rough sawn top (no up charge)
•			Reverse sides (no up charge)
•			Finished back side on left side of desk

See complete options list on pgs 142-143

See page 215 for dimensional details.

Kascade OFFICE COLLECTION

Form and function found the best possible balance in the Kascade office. Uniquely artful details like corbels and applied slats create a new twist on the classic Mission style. Subtly designed accommodations for modern office electronics are also built in.

Kascade
Desks

Standard Features

A	B	C	D	
•	•	•	•	Kneehole 24½" W, with pencil drawer
•	•	•	•	1 File drawer, each side
•	•	•	•	Pullout above drawers, each side
•		•	•	Unfinished back
	•			Finished back
	•			Curved top
			•	4" deep drawers with stop (prevents drawers from falling out)
			•	Top slots = 4½" W x 9¾" D x 5" H; Side slots = 11½" W x 9¾" D x 4¼" H; all dividers removable
•	•	•	•	Hardware = 1" Black square knob **R** (shown)

Optional Features

A	B	C	D	
•	•	•	•	Flat sides – no Kascade slatted detail (no up charge)
•		•		Finished back

See complete options list on pgs 142-143

FVD-2865-KS
65" W x 28¼" D x 31" H

FVD-3365-KS
curved top desk base
65" W x 33" D x 31" H

FVD-2849-KS
48¼" W x 28¼" D x 31" H

Optional flat sides

FVD-2865-DT-KS
Desk: 65" W x 28¼" D x 31" H
Topper: 53½" W x 11¼" D x 17" H

Kascade

File Cabinets & Lateral File Credenza

Standard Features

A	B	C	
•		•	Unfinished back
	•		Finished back
•	•		2 Std. file drawers
		•	2 Lateral file drawers
		•	Soft close (concealed hinge) doors
		•	1 Adj. shelf behind doors
•	•	•	Hardware = 1" Black square knob **R** (shown)

Optional Features

See complete options list on pgs 142-143

Also available:

FVL-2144-KS

2 Drawer Lateral File Cabinet,
42" W x 19¾" D x 31" H

FVL-2144 Drawers come with 2 sets of black aluminum file rails with slots for standard or legal files

QS White Oak · Golden Brown

A

FVF-2DWR-KS
21¼" W x 28¼" D x 31" H

Also available:
FVF-3DWR-KS
3 Drawer File Cabinet, 43¾" H

QS White Oak · Golden Brown

B

FVF-2DWR-KS-F
21¼" W x 29½" D x 31" H

Also available:
FVF-3DWR-KS-F
3 Drawer File Cabinet
with Finished Back, 43¾" H

QS White Oak · Golden Brown

C

FVLC-063-KS
63" W x 19¾" D x 31" H

LEXINGTON ARC
Desks

Standard Features

A	B	C	D	
•	•	•	•	Kneehole 24½" W, with pencil drawer
•	•	•	•	Pullout above drawers, each side
•	•	•		1 File drawer, each side
			•	2 drawers on right side; file drawer on left side (looks like double drawer)
•		•		Unfinished back
	•		•	Finished back
•	•	•		Hardware = Satin Nickel drawer pull **T-2** (shown)

Optional Features

A	B	C	D	
•		•		Finished back
			•	Remove vertical slats on sides (no up charge)
•		•		Hardware = **1-B** (no up charge)

See complete options list on pgs 142-143

FVD-2865-LA
65" W x 28½" D x 31" H

FVD-3365-LA
curved top desk base
65" W x 33" D x 31" H

FVD-2849-LA
49⅛" W x 28½" D x 31" H

FVD-3065-LA
65" W x 30" D x 31" H

Finished back side

LEXINGTON ARC
Hutch & L Desk

Standard Features

A	B	
•	•	Kneehole 30½" W, each side
•	•	Keyboard pull-out drawer on left; pencil drawer on right
•	•	Pullout above drawers, each side
•	•	1 File drawer, each side
•	•	Unfinished back (left side), finished back (right side)
•	•	Grommet in top (hutch side)
•		Soft close (concealed hinge) doors
•		Dimmable LED touch lighting (warm white) in work area and open shelf area; adjustable glass shelf in center
•		1 Adj. shelf behind small doors, 2 behind large door on right
•		Work area = 47¼" W x 13" D x 22" H
•	•	Hardware = 1" Satin Nickel knob and drawer pull **T-1, T-2** (shown)

Optional Features

A	B	
•	•	Reverse sides (no up charge)
	•	Finished back side on left side of desk
•	•	Hardware = **1-A, 1-B** (no up charge)

See complete options list on pgs 142-143

Sap Cherry · Charwood

A

FVD-7878L-HT-LA
3pc desk base & hutch
desk: 78" W (left & right side) x 30" D x 31" H
hutch: 71¾" W x 17¼" D x 48¾" H

Sap Cherry · Charwood

B

FVD-7878L-LA
2pc desk base
78" W (left & right side) x 30" D x 31" H

See page 214 for dimensional details.

LEXINGTON ARC

Filing Cabinets & Lateral File Credenza

Standard Features

A	B	C	D	
•	•		•	Unfinished back
		•		Finished back
	•	•		2 Std. file drawers
•			•	2 Lateral file drawers
			•	Soft close (concealed hinge) doors
			•	1 Adj. shelf behind doors
•	•	•	•	Hardware = 1" Satin Nickel knob and drawer pull **T-1, T-2** (shown)

Optional Features

A	B	C	D	
•	•	•	•	Blum, soft close undermount drawers
•	•	•	•	Hardware = **1-A, 1-B** (no up charge)

See complete options list on pgs 142-143

FVL-2144 Drawers come with 2 sets of black aluminum file rails with slots for standard or legal files

Sap Cherry · Carbon

A

FVL-2144-LA
44¼" W x 21" D x 31" H

Brown Maple · Charwood

B

FVF-2DWR-LA
23" W x 28½" D x 31" H

Brown Maple · Charwood

C

FVF-2DWR-LA-F
23" W x 29¾" D x 31" H

Sap Cherry · Charwood

D

FVLC-063-LA
63" W x 21" D x 31" H

Marina OFFICE COLLECTION

Sophisticated, open-concept design meets quality-conscious construction in the Marina office collection. A modern workspace with all the functional office features you expect and a sleek, simplistic look subtly state that you're a connoisseur of good taste in both your professional and personal life.

Marina

Hutch, L Desk, Desk & Credenza

Standard Features

A	B	C	D	
•	•	•	•	1" Solid tops and sides
•	•	•	•	Locking mitered joints on corners
•	•			Kneehole 34" W each side
			•	Kneehole 24½" W, with pencil drawer
•	•			Keyboard pull-out drawer on left; pencil drawer on right
•	•		•	1 File drawer, each side
•	•		•	Finished back (both sides)
•	•			Grommet in top (hutch side)
•				Work area= 47¼" W x 11¼" D x 24⅞"H
		•		Soft close (concealed hinge) doors
		•		1 Adj. shelf behind doors
		•		1 Lateral file drawer, 1 regular drawer
•	•	•	•	Hardware = Satin Nickel door knob and drawer pull **10-A, 10-B** (shown)

Optional Features

See complete options list on pgs 142-143

Standard locking miter joints

See page 217 for dimensional details.

Oak · American Antique

A

FVD-7878L-HT-MA
3pc desk base & hutch
desk: 78" W (left & right side) x 28" D x 31" H
hutch: 63⅝" W x 12" D x 36" H

Oak · American Antique

B

FVD-7878L-MA
2pc desk base
78" W (left & right side) x 28" D x 31" H

Oak · American Antique

C

FVLC-063-MA
63" W x 18" D x 34" H

Rustic Walnut · Bel Air

D

Finished back side

FVD-2858-MA
57½" W x 28" D x 31" H

SARATOGA OFFICE COLLECTION

With its dramatic circles, deep bevels and flowing lines Saratoga creates an office environment like no other…a space that's inviting, artistic and exciting. It's the perfect catalyst for great thoughts and ideas, so pull up a chair and be inspired!

SARATOGA
Desks

Standard Features

A	B	
•	•	Finished back side
•	•	Pencil drawer
•	•	Solid, curved base with curved drawer front
	•	Kneehole 24½" W
	•	Pullout above drawers, each side
	•	2 Drawers on right side; file drawer on left side (looks like double drawer)
•	•	Hardware = Satin Nickel drawer pull **I-2** (shown)

FVD-2654-ST
writer's desk
54" W x 26" D x 31" H

Optional Features

A	B	
•	•	Hardware = **J-2** (no up charge)

See complete options list on pgs 142-143

FVD-3068-ST
68¼" W x 30" D x 31" H

Finished back side

SARATOGA
Desk & Back Bar

Standard Features

A	B	C	
●	●	●	Solid curved base, curved drawer fronts
	●	●	2 Adj. shelves behind each door
●			Kneehole 24½" W, with pencil drawer
●			Pullout above drawers, each side
●			1 File drawer, each side
	●	●	Unfinished back
●			Finished back
●	●	●	Hardware = 1¼" Satin Nickel knob and drawer pull **I-1, I-2** (shown)

Optional Features

Hardware = **J-1, J-2** (no up charge)

See complete options list on pgs 142-143

See page 218 for dimensional details.

Finished back side

Sap Cherry · Burnt Umber

A

FVD-3367-ST
curved top desk
67" W x 33" D x 31" H

Sap Cherry · Burnt Umber

B FVBB-2074-HT-ST · 2pc back bar & hutch top
74" W x 19¾" D x 87½" H

C FVBB-2074-ST · back bar (base only)
74" W x 19¾" D x 34" H

PARIS TIMBRA *Ventura* Desks

Standard Features

A	B	C	
•	•	•	Finished back
•			Electric lift mechanism (made in the USA) for desk top – top lifts from 28" H - 46" H; 200lb. weight capacity on lift
•			Height switch with 3 programmable settings for lift mechanism
•			Lift-up lid with storage and power station TVSP3802-F
	•	•	Kneehole 24½" W, with pencil drawer
	•		Pullout above drawers, each side; 1 file drawer each side
		•	1" Thick top
	•		Hardware = Swedish Iron drawer pull **7-B** (shown)
		•	Hardware = Satin Nickel drawer pull **Y-1** (shown)

Optional Features

A	B	C	
•			Gunmetal color lift mechanism (no up charge)
	•		Hardware = **13-B** (no up charge)

See complete options list on pgs 142-143

Gunmetal color lift mechanism

Hickory · Almond

A FVD-430-PR
Paris Electric Sit-to-Stand Writer's Desk
48" W x 32" D x 28"- 46" H

Rustic Cherry · Chestnut

B

Finished back side

FVD-3365-TB-LET
Timbra live edge desk
65" W x 31" D x 31" H

Also available:
FVD-3365-TB · Desk (no live edge), 1" thick top
65" W x 33" D x 31" H

Sap Cherry · Asbury Brown

C

FVD-2654-VT
Ventura writer's desk
54" W x 26" D x 31" H

Victorian WRAP-AROUND DESK

What do you want your workspace to say about you? That quality is a priority to you? That you sweat the details? That the style best suited to your taste is simple yet stately? If so, the Victorian Wrap-Around Desk is the perfect choice for your home or business office.

Victorian Wrap Around Desk & Std Desks

Standard Features

A	B	C	
●	●	●	Solid, raised panel sides
●	●	●	Pullout above drawer bank with 3 drawers (1 file drawer), each side
●			Top has mitered corners
●			Keyboard pull-out drawer on hutch side; pencil drawers – 2 in center kneehole, 1 in outside kneehole
	●	●	Kneehole 24½" W, with pencil drawer
●			Grommet in top (hutch side)
●			Soft close (concealed hinge) doors
●			Dimmable LED (warm white) touch lighting in work area and open shelf area
●			2 Adj. shelves behind wood doors, 1 adj. glass shelf in center
●			Finished back on front and left side; unfinished back on hutch side
	●		Unfinished back
		●	Finished back
●	●	●	1¼" Oil Rubbed Bronze knob and drawer pull **S-1, S-2** (shown)

Optional Features

A	B	C	
●			Reverse sides (no up charge)
●	●	●	Hardware = **8-A, 8-B** (no up charge) 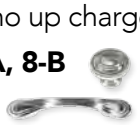

See complete options list on pgs 142-143

See page 217 for dimensional details.

Rustic Cherry · Michael's Cherry

A

FVD-9678U-HT-VS · 4pc desk
desk: 78" W x 96" D x 31" H
hutch: 74¼" W x 19½" D x 53" H

Also available:
FVD-9678U-VS
3pc desk base only

Sap Cherry · Vintage Antique

B

FVD-2865-VS
63¾" W x 28" D x 31" H

Sap Cherry · Vintage Antique

C

FVE-3365-VS
63¾" W x 33" D x 31" H

Victorian
Hutch & L Desk

Standard Features

A	B	
•	•	Solid, raised panel sides
•	•	Kneehole 30½" W, each side
•	•	Keyboard pull-out drawer on left; pencil drawer on right
•	•	Pullout above drawers, each side
•	•	1 File drawer, each side
•	•	Unfinished back (left side), finished back (right side)
•	•	Grommet in top (hutch side)
•		Soft close (concealed hinge) doors
•		Dimmable LED touch lighting (warm white) in work area and open shelf area
•		1 Adj. shelf behind each door
•		Work area = 67¾" W x 13" D x 19½" H
•	•	Hardware = 1¼" Oil Rubbed Bronze knob and drawer pull **S-1, S-2** (shown)

Optional Features

A	B	
•	•	Reverse sides (no up charge)
•	•	Finished back side on left side of desk
•	•	Hardware = **8-A, 8-B** (no up charge)

See complete options list on pgs 142-143

Oak · Briar

A

FVD-7878L-HT-VS · 3pc desk base & hutch
desk: 78" W (left & right side) x 30" D x 31" H
hutch: 77⅞" W x 16¾" D x 48½" H

Oak · Briar

B

FVD-7878L-VS
2pc desk base
78" W (left & right side) x 30" D x 31" H

Also available:

FVLC-063-VS
2 Door, 2 Drawer Lateral File Credenza
63" W x 19¾" D x 31" H

FVL-2144-VS
2 Drawer Lateral File Cabinet
43" W x 19¾" D x 31" H

See page 216 for dimensional details.

DECORATIVE HARDWARE

A-1	K-40-B	1¼" Diameter round wood knob
A-2	K-40-C	1½" Diameter round wood knob
B-1	K-50-B	1¼" Square pyramid wood knob
B-2	K-50-C	1½" Square pyramid wood knob
C-1	11-LP	1⅛" Low profile round wood knob
C-2	17-LP	1¾" Low profile round wood knob
D	K-53-BL	1¼" Square pyramid Black knob
F-1	S6060BNBDL	1¼" Bright Nickel, Brushed Dull knob
F-2	Z260-3BNBDL	Bright Nickel, Brushed Dull drawer pull
H-2	D-527-A	Black Mission door pull
H-3	D-529-A	Black Mission drawer pull
I-1	595-SN	1¼" Satin Nickel knob
I-2	595-96-SN	1¼" Satin Nickel drawer pull
J-1	595-DBAC	1¼" Oil Rubbed Bronze knob
J-2	595-96-DBAC	Oil Rubbed Bronze drawer pull
L-1	D552-BL	Black door pull
L-2	D553-BL	Black drawer pull
M-1	D552-ORB	Oil Rubbed Bronze door pull
M-2	D553-ORB	Oil Rubbed Bronze drawer pull
O-1	53005-G10	1¼" Satin Nickel round knob
P-1	K570-W	1" Wrought Iron knob
P-2	D-521-W	Wrought Iron drawer pull
Q-1	K155-DBAC	1⅛" Antique Copper knob
Q-2	K155-96DBAC	Antique Copper drawer pull
R	D524-BI	1" Black square knob
S-1	107-DBAC	1¼" Oil Rubbed Bronze knob
S-2	3899-DBAC	Oil Rubbed Bronze drawer pull
T-1	525-SN	1" Satin Nickel knob
T-2	525-96-SN	Satin Nickel drawer pull
U	HH1217-MB	1" Black knob
W-1	4425-WI	1¼" Wrought Iron knob
W-2	4424-WI	Wrought Iron drawer pull
X-1	D942-BL	1¼" Black Stickley Mission knob
X-2	D925-BL	Blk Stickley Mission drawer pull
Y-1	4655-SN	5" Satin Nickel pull

1-A	525-DBAC	1" Oil Rubbed Bronze knob
1-B	525-96-DBAC	Oil Rubbed Bronze drawer pull
2-A	P3230-OBH	1¼" Oil Rubbed Bronze knob
2-B	P3232-OBH	Oil Rubbed Bronze drawer pull
3-A	P3230-SN	1¼" Satin Nickel knob
3-B	P3232-SN	Satin Nickel drawer pull
4-A	4425-ORB	1¼" Oil Rubbed Bronze knob
4-B	4424-ORB	Oil Rubbed Bronze drawer pull
7-A	K58-SI	1½" Long Swedish Iron door pull
7-B	K558-SI	Swedish Iron drawer pull
8-A	107-SN	1¼" Satin Nickel knob
8-B	3899-SN	Satin Nickel drawer pull
9-B	26203-G10	Satin Nickel drawer pull
10-A	993-SN	1¾" Long Satin Nickel door handle
10-B	P3371-SS	Satin Nickel drawer pull
11-B	415-128-BNBDL	Brushed Pewter drawer pull
13-B	BP205128195	Satin Nickel drawer pull
14-A	105-SBZ	1¼" Satin Bronze knob
14-B	105-128-SBZ	Satin Bronze drawer pull

DOOR OPTIONS

Nothing gives our solid wood furniture the finishing touches like hand-applied mullions. Other insert options include speaker cloth, and clear beveled, seedy or water glass.

Mullions

MLMM

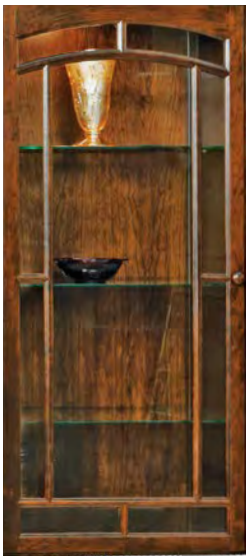

MLVS

MLHH

MLOCS

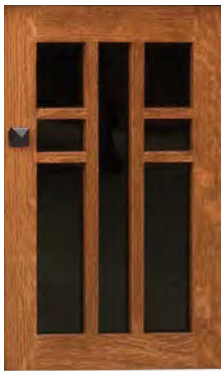

MLKS

MLAC

MLCN

Inserts

Clear beveled glass

Speaker cloth

Seedy glass

Water glass

Special Note: *All remotes work through glasswork on this page.*

Dimensional Details

No details have been forgotten when preparing for your furnishing purchase.

This section has all the dimensions for media consoles, cabinets, large wall units, and office furnishings needed for reference when selecting and ordering.

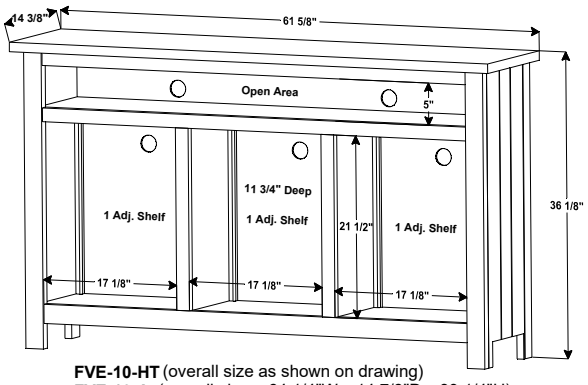

FVE-10-HT (overall size as shown on drawing)
FVE-10-A (overall size = 64 1/4"W x 14 7/8"D x 39 1/4"H)
FVE-10-BC (overall size = 62 3/8"W x 15"D x 36"H)
FVE-10-D (overall size = 61 5/8"W x 14"D x 35 7/8"H)
FVE-10-EN (overall size = 64 7/8"W x 14 1/2"D x 38"H)
FVE-10-LA (overall size = 63 5/8"W x 15 1/2"D x 36"H)

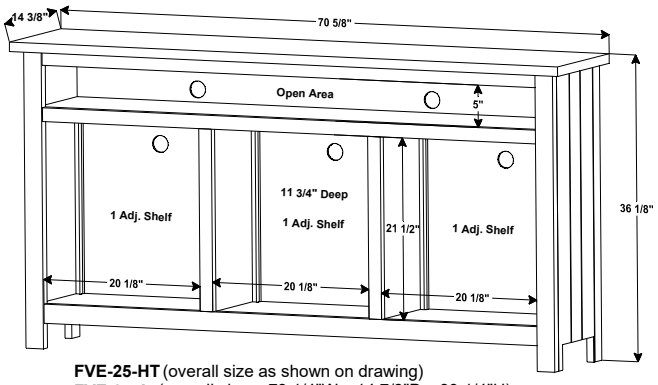

FVE-25-HT (overall size as shown on drawing)
FVE-25-A (overall size = 73 1/4"W x 14 7/8"D x 39 1/4"H)
FVE-25-BC (overall size = 71 3/8"W x 15"D x 36"H)
FVE-25-D (overall size = 70 5/8"W x 14"D x 35 7/8"H)
FVE-25-EN (overall size = 73 7/8"W x 14 1/2"D x 38"H)
FVE-25-LA (overall size = 72 5/8"W x 15 1/2"D x 36"H)

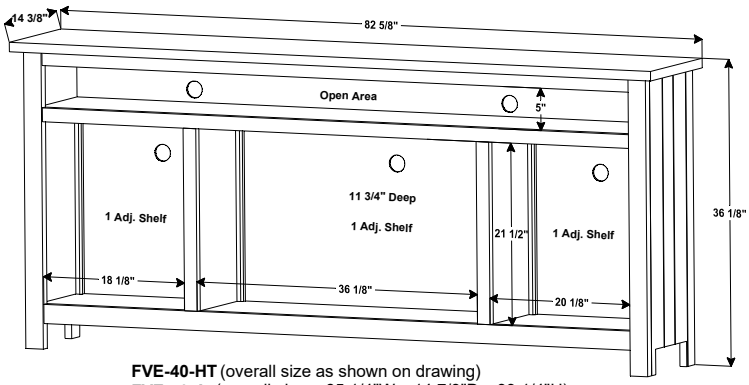

FVE-40-HT (overall size as shown on drawing)
FVE-40-A (overall size = 85 1/4"W x 14 7/8"D x 39 1/4"H)
FVE-40-BC (overall size = 83 3/8"W x 15"D x 36"H)
FVE-40-D (overall size = 82 5/8"W x 14"D x 35 7/8"H)
FVE-40-EN (overall size = 85 7/8"W x 14 1/2"D x 38"H)
FVE-40-LA (overall size = 84 5/8"W x 15 1/2"D x 36"H)

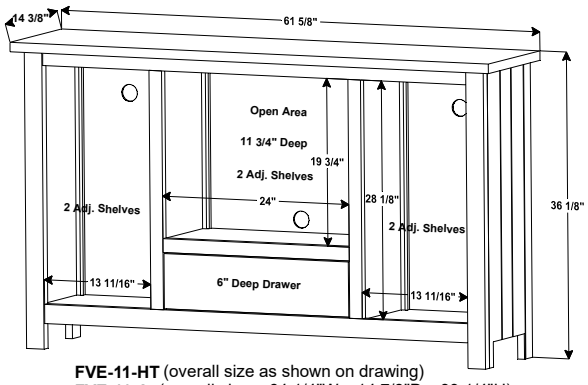

FVE-11-HT (overall size as shown on drawing)
FVE-11-A (overall size = 64 1/4"W x 14 7/8"D x 39 1/4"H)
FVE-11-BC (overall size = 62 3/8"W x 15"D x 36"H)
FVE-11-D (overall size = 61 5/8"W x 14"D x 35 7/8"H)
FVE-11-EN (overall size = 64 7/8"W x 14 1/2"D x 38"H)
FVE-11-LA (overall size = 63 5/8"W x 15 1/2"D x 36"H)

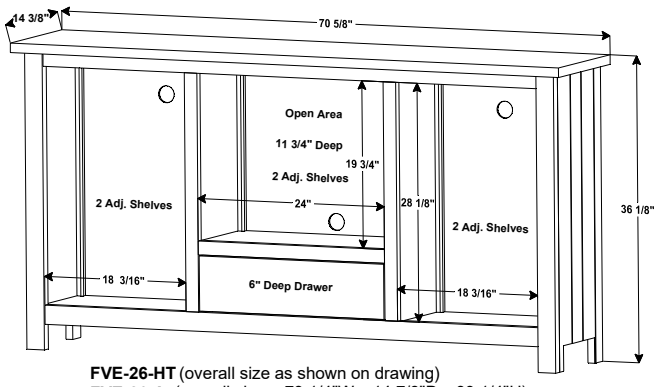

FVE-26-HT (overall size as shown on drawing)
FVE-26-A (overall size = 73 1/4"W x 14 7/8"D x 39 1/4"H)
FVE-26-BC (overall size = 71 3/8"W x 15"D x 36"H)
FVE-26-D (overall size = 70 5/8"W x 14"D x 35 7/8"H)
FVE-26-EN (overall size = 73 7/8"W x 14 1/2"D x 38"H)
FVE-26-LA (overall size = 72 5/8"W x 15 1/2"D x 36"H)

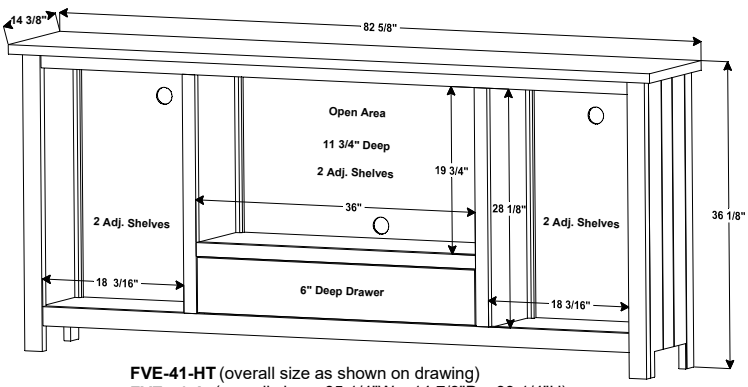

FVE-41-HT (overall size as shown on drawing)
FVE-41-A (overall size = 85 1/4"W x 14 7/8"D x 39 1/4"H)
FVE-41-BC (overall size = 83 3/8"W x 15"D x 36"H)
FVE-41-D (overall size = 82 5/8"W x 14"D x 35 7/8"H)
FVE-41-EN (overall size = 85 7/8"W x 14 1/2"D x 38"H)
FVE-41-LA (overall size = 84 5/8"W x 15 1/2"D x 36"H)

Dimensional Details | media stands, cabinets & consoles

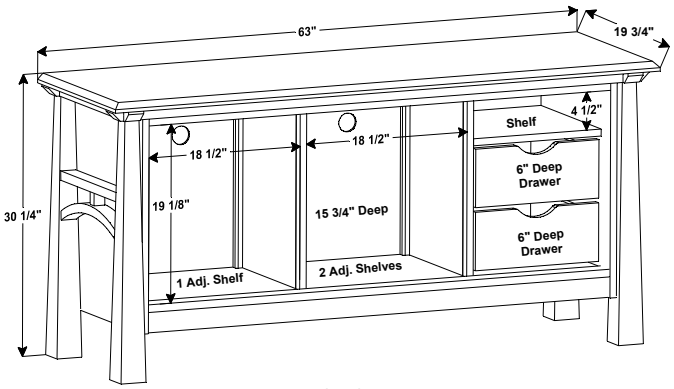

FVE-060-A-BP

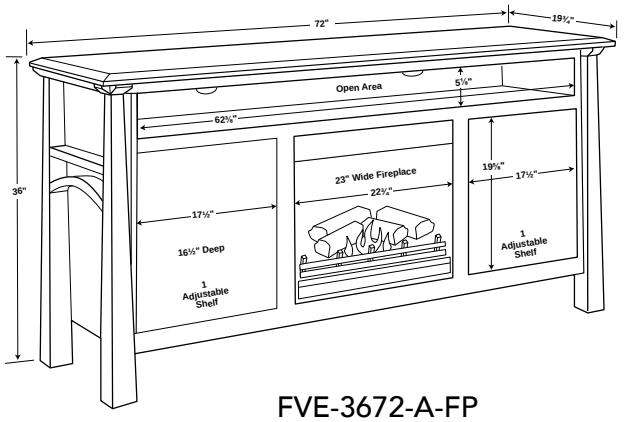

FVE-3672-A-FP

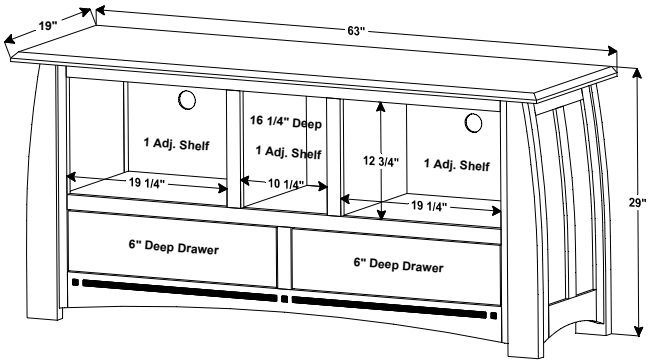

FVE-032-BC-BP

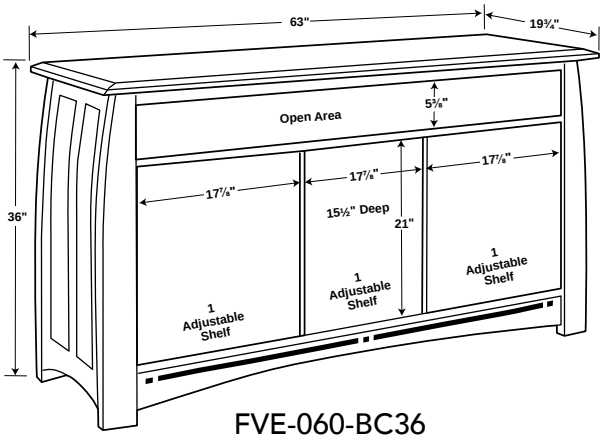

FVE-060-BC36

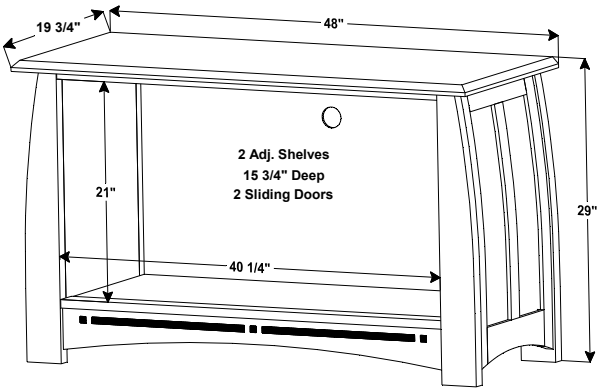

FVE-048-BC

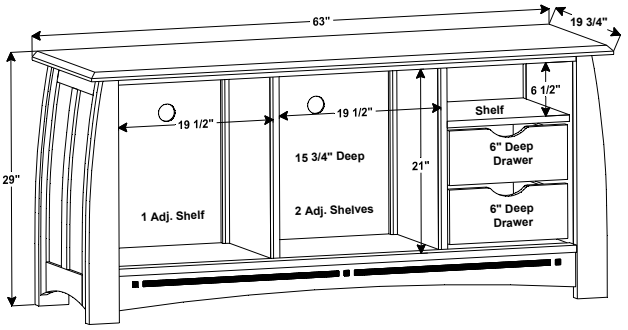

FVE-060-BC-BP

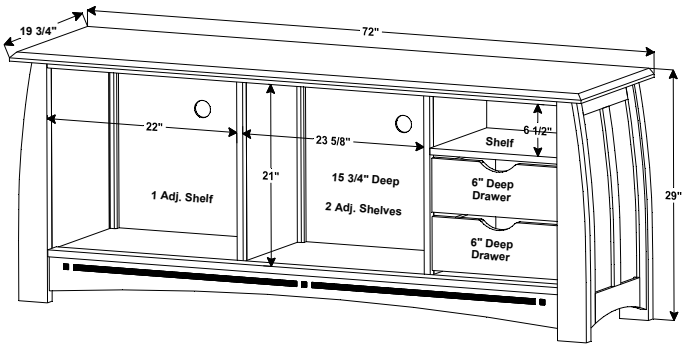

FVE-072-BC-BP

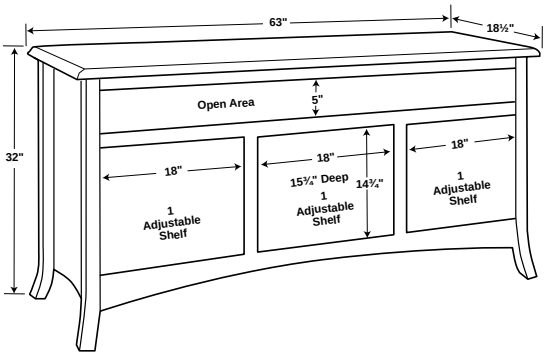

FVE-3263-CR

Dimensional Details | media stands, cabinets & consoles

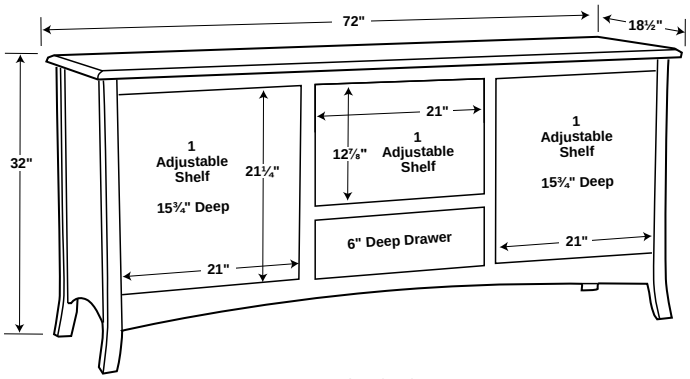

FVE-072-CR

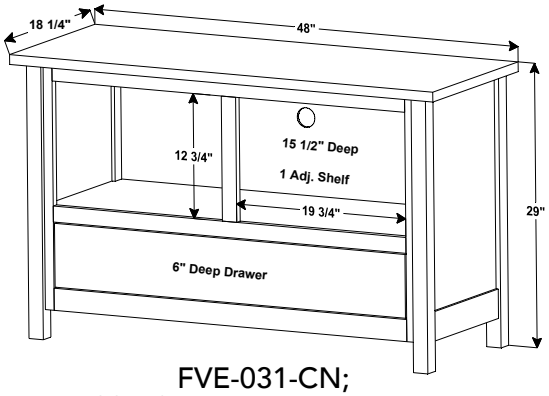

FVE-031-CN;
FVE-031-CB (top size = 18¾ D x 49¼ W)
FVE-031-WL

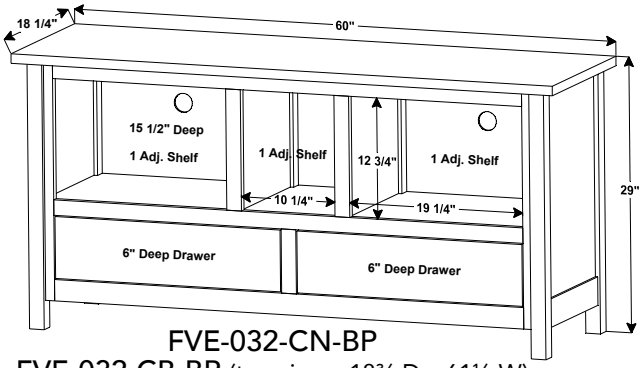

FVE-032-CN-BP
FVE-032-CB-BP (top size = 18¾ D x 61¼ W)
FVE-032-MD-BP; FVE-032-WL-BP

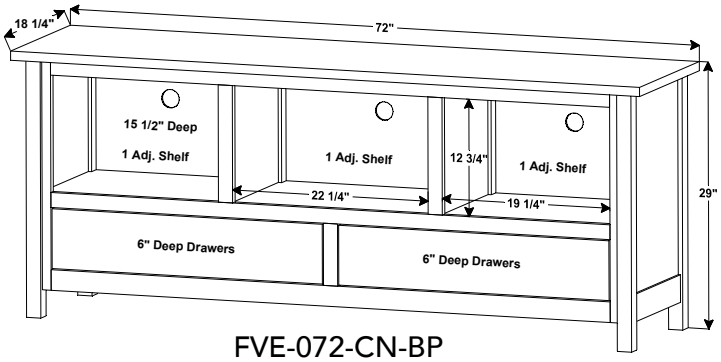

FVE-072-CN-BP
FVE-072-CB-BP (top size = 18¾ D x 73¼ W)
FVE-072-MD-BP; FVE-072-WL-BP

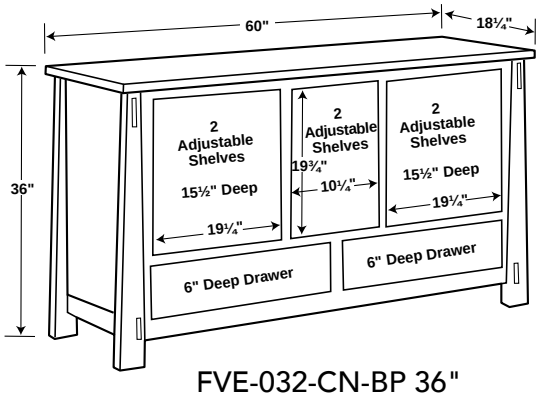

FVE-032-CN-BP 36"
FVE-032-MD-BP 36"

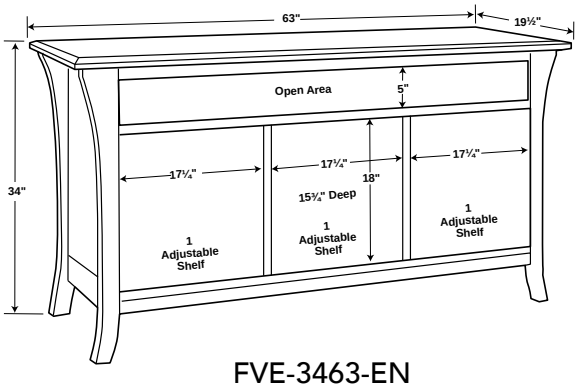

FVE-3463-EN

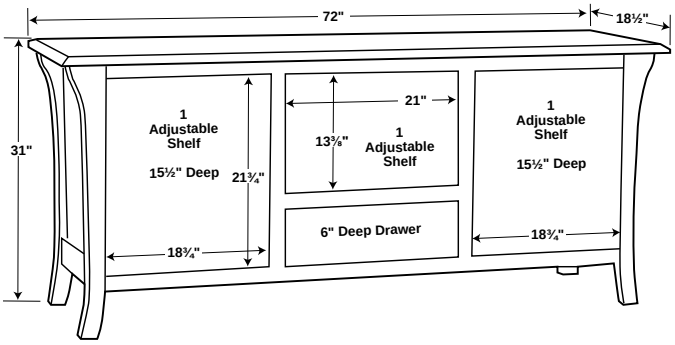

FVE-072-EN

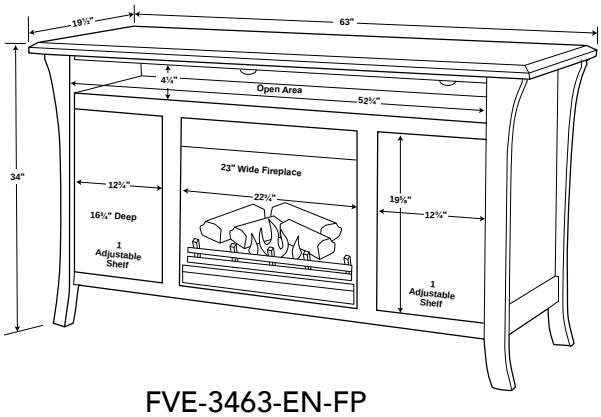

FVE-3463-EN-FP

Dimensional Details | media stands, cabinets & consoles

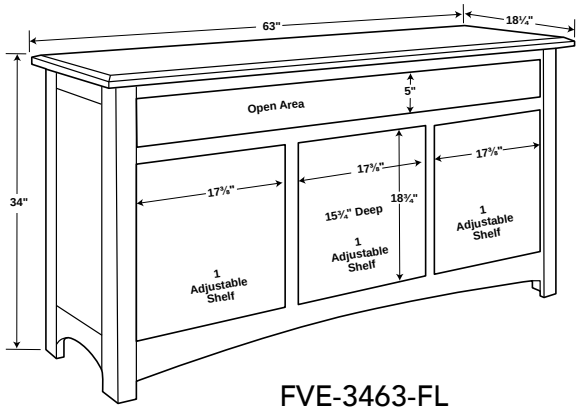

FVE-3463-FL

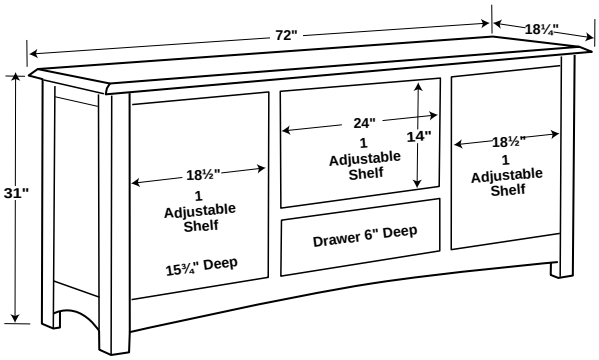

FVE-072-FL

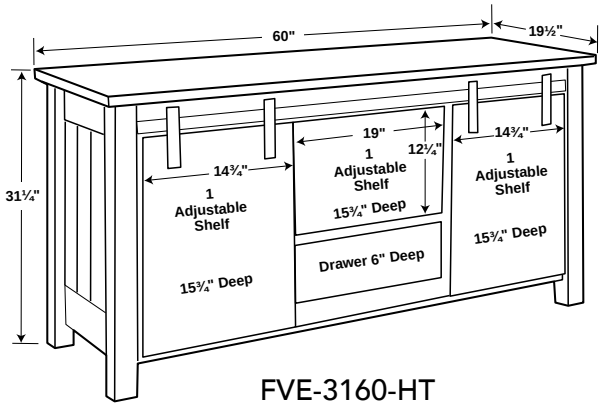

FVE-3160-HT
FVE-3160-TB

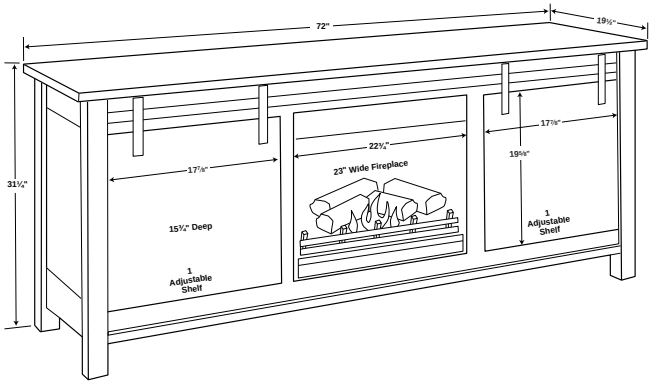

FVE-3172-HT-FP

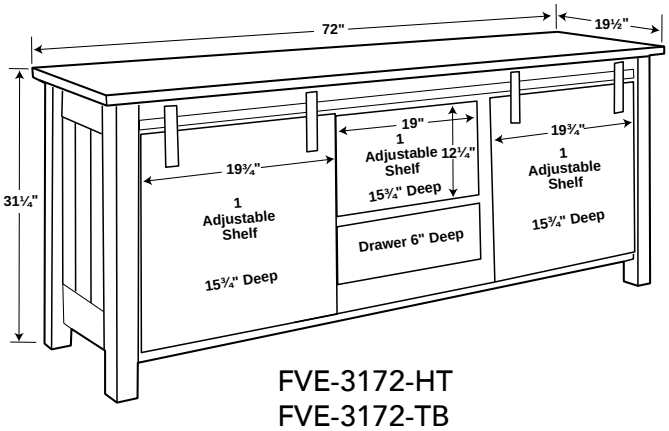

FVE-3172-HT
FVE-3172-TB

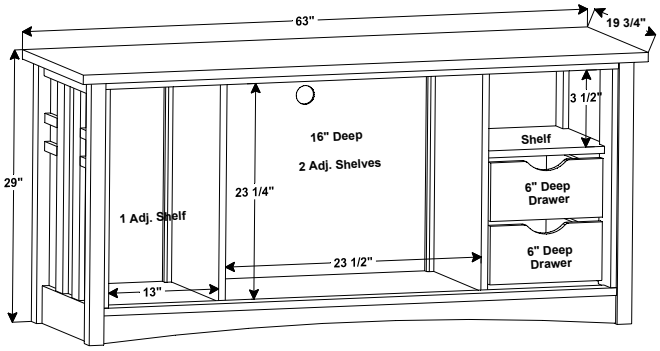

FVE-060-KS-BP

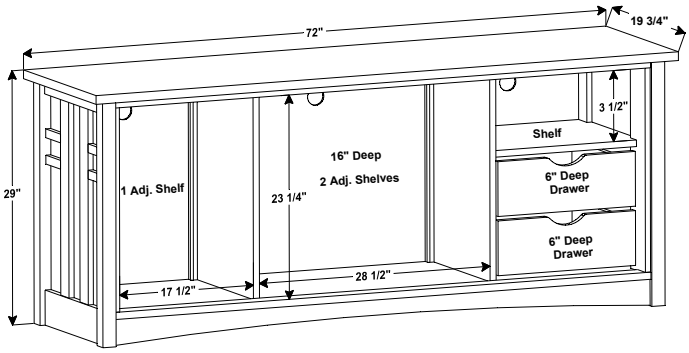

FVE-072-KS-BP

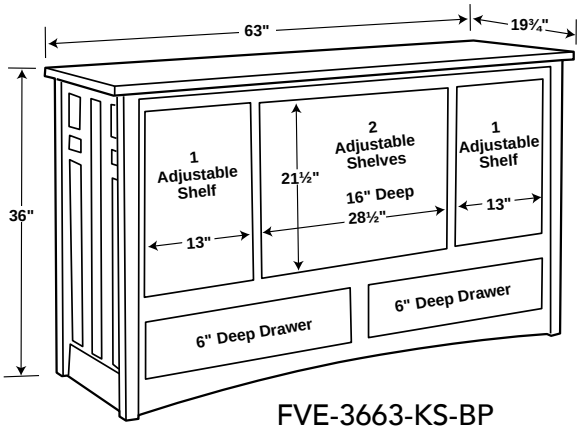

FVE-3663-KS-BP

Dimensional Details | media stands, cabinets & consoles

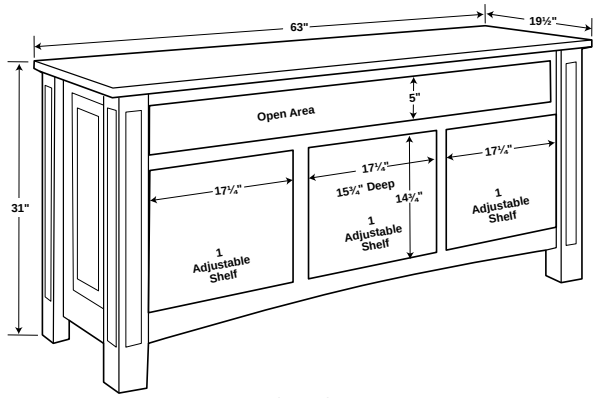

FVE-3163-LX

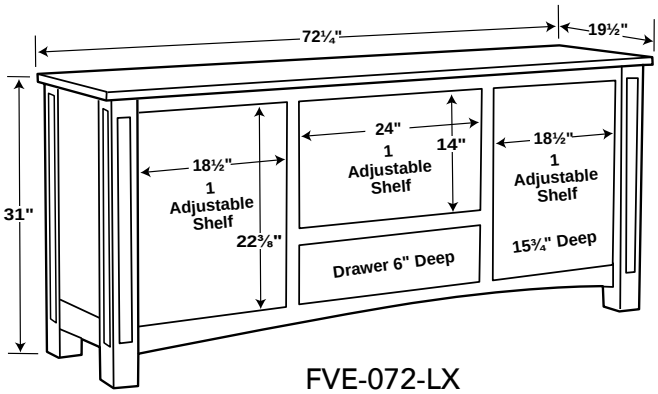

FVE-072-LX

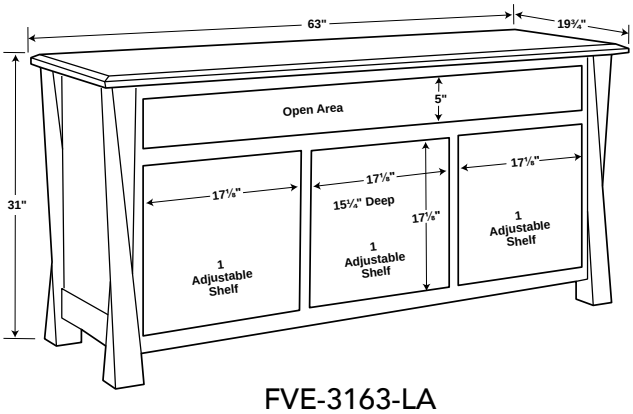

FVE-3163-LA

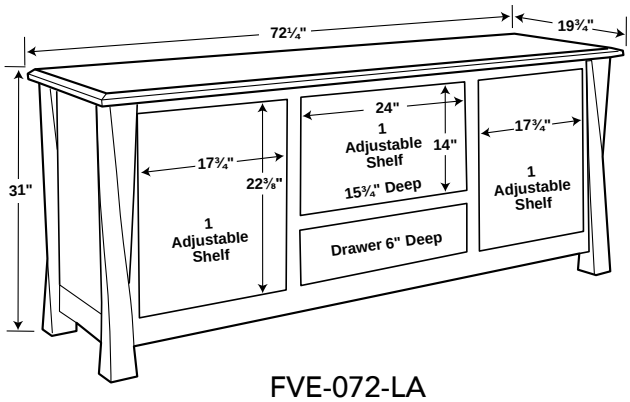

FVE-072-LA

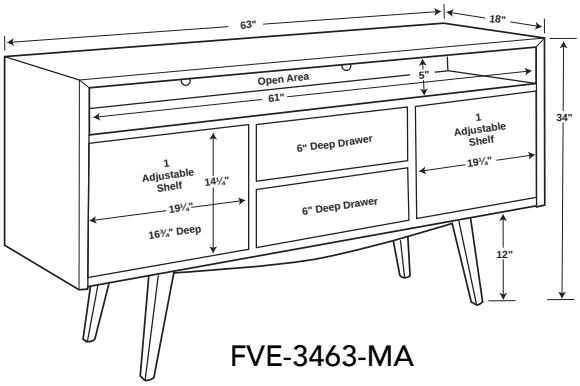

FVE-3463-MA

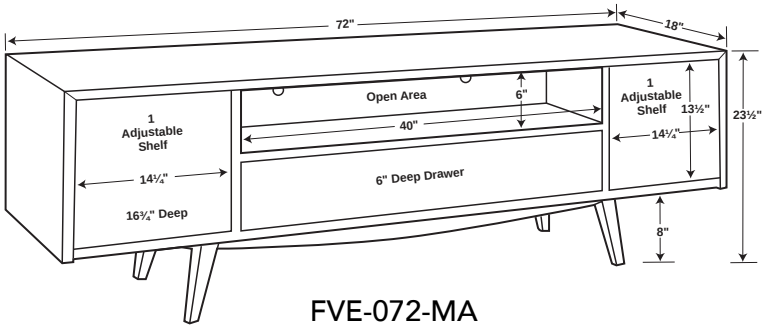

FVE-072-MA

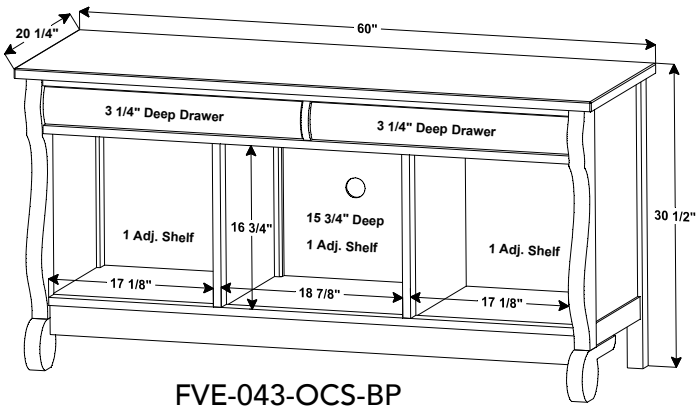

FVE-043-OCS-BP

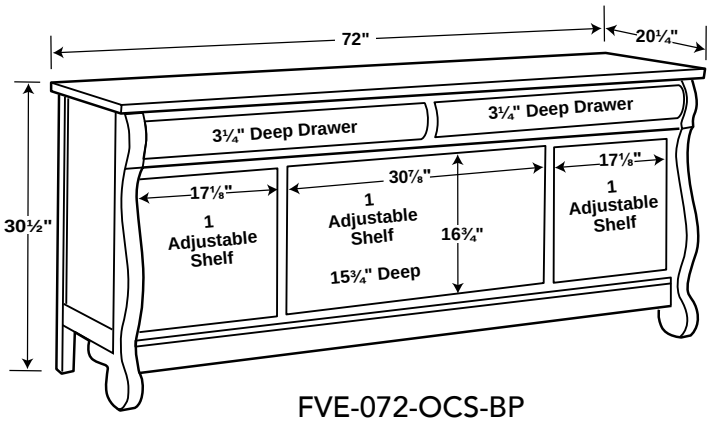

FVE-072-OCS-BP

Dimensional Details | media stands, cabinets & consoles

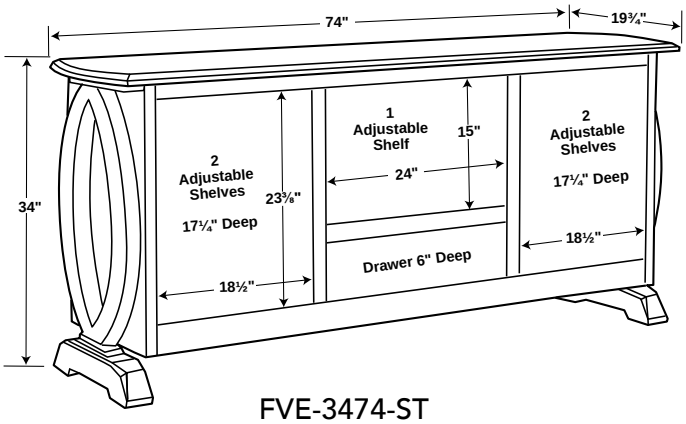

FVE-3474-ST

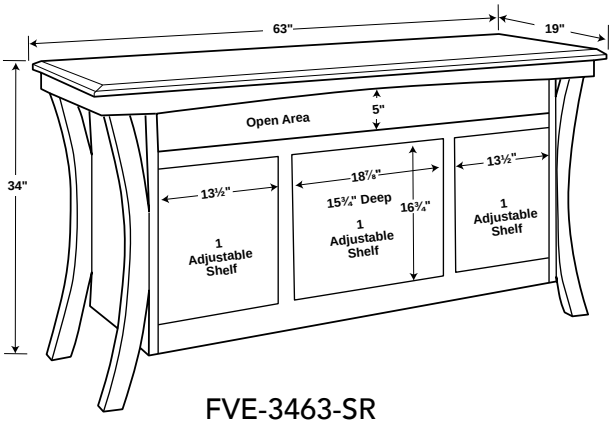

FVE-3463-SR

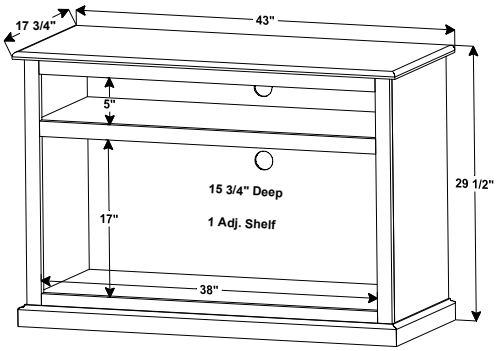

FVE-024-C-XL

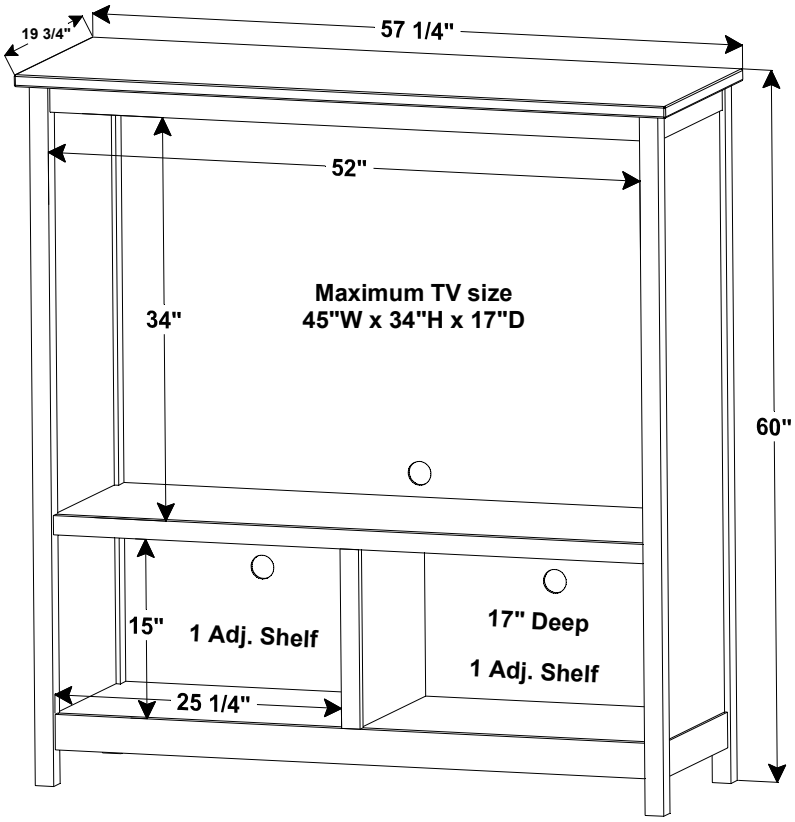

FVE-05-CN
TV sits 21¼" off the floor

Dimensional Details | media wall units

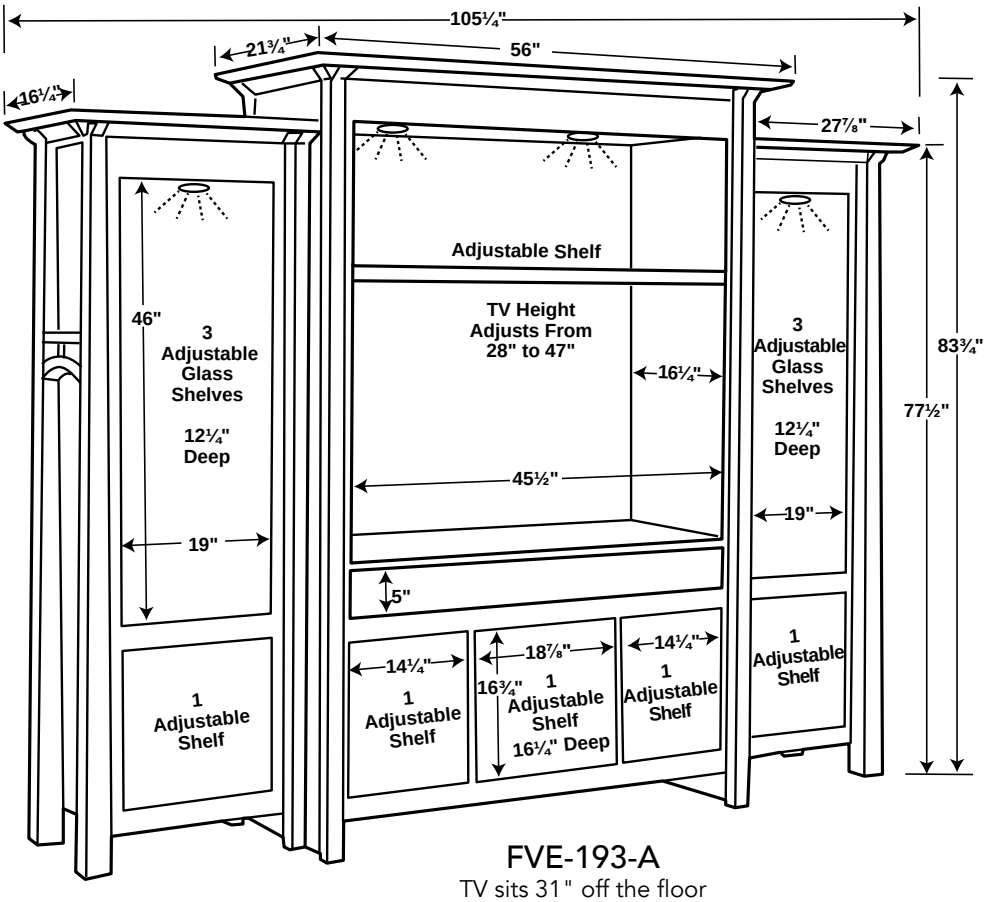

FVE-193-A

TV sits 31" off the floor

Available in 5 different increments
45½" Wide; 50½" Wide; 55½" Wide; 60½" Wide; 68½" Wide
Please specify width when ordering

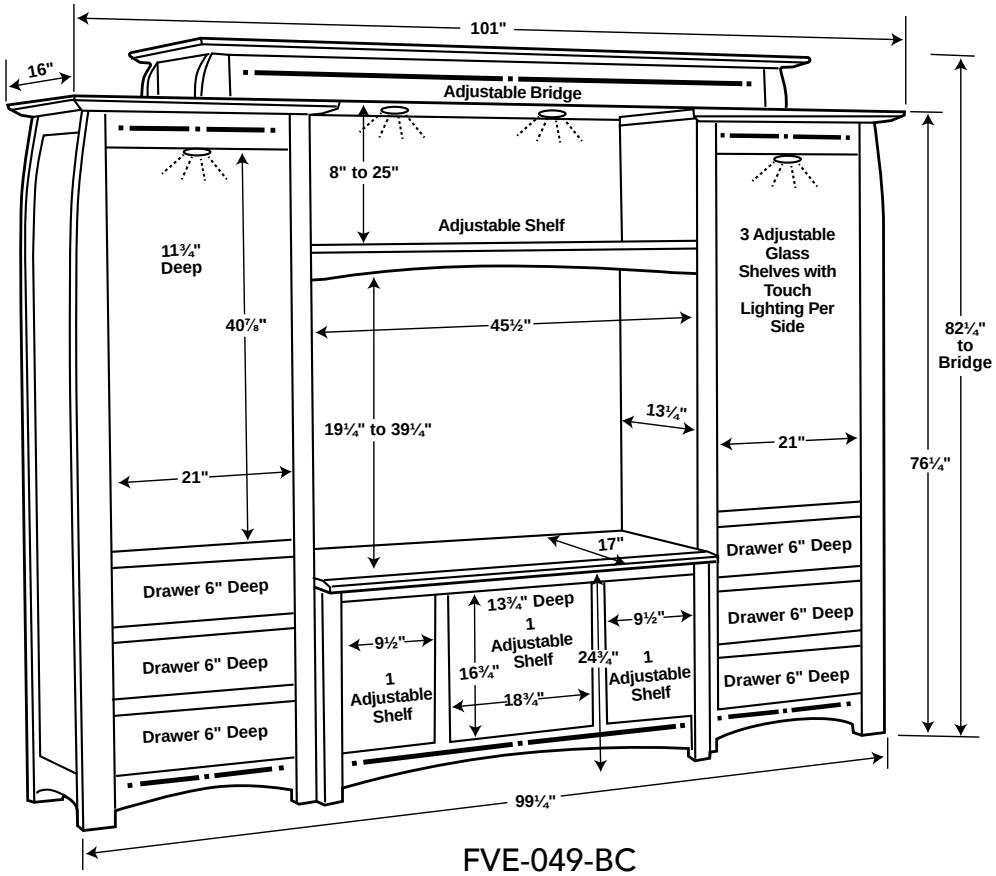

FVE-049-BC

Dimensional Details | media wall units

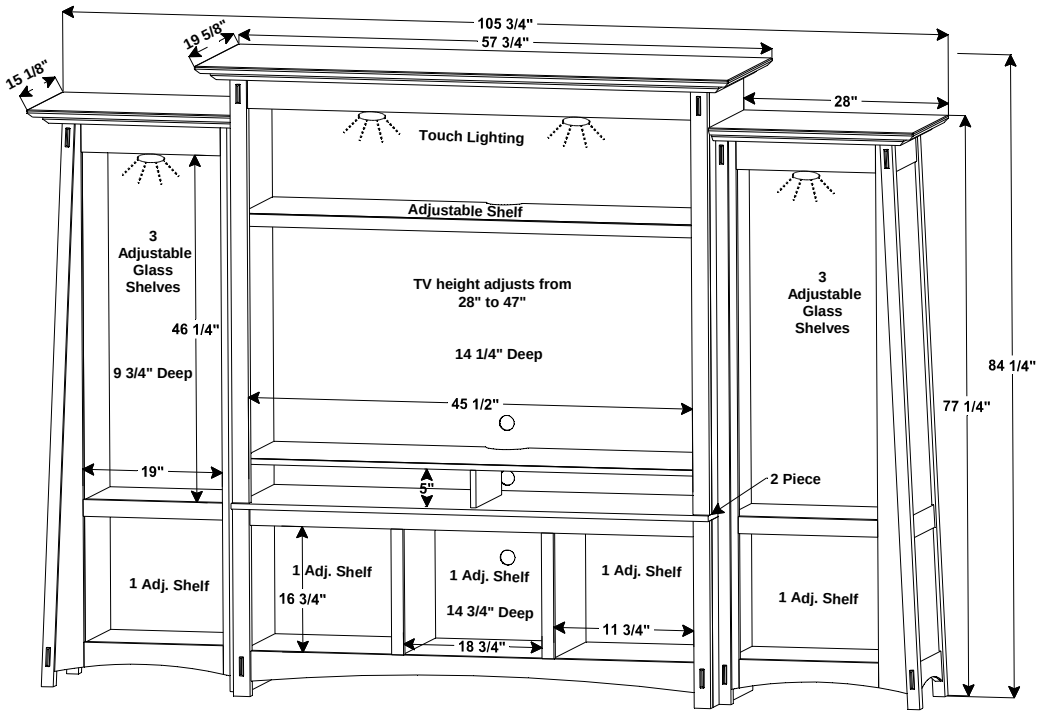

FVE-193-CB

TV sits 31 " off the floor

Available in 4 different increments
45½" Wide; 50½" Wide; 55½" Wide; 60½"Wide
Please specify width when ordering

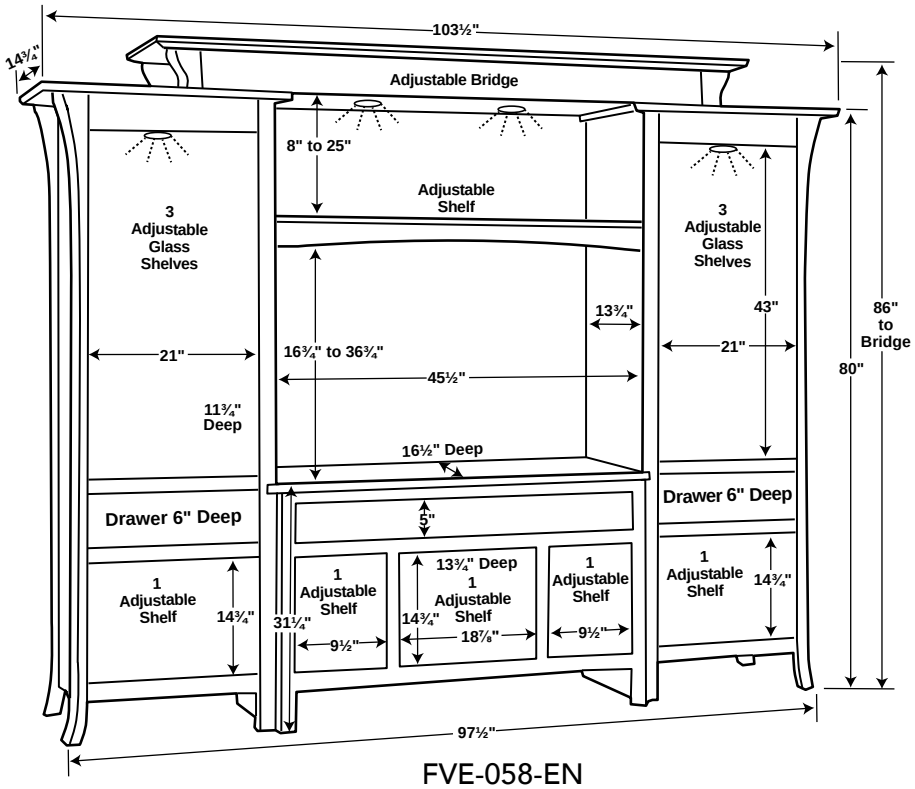

FVE-058-EN

Available in 5 different increments
45½" Wide; 50½" Wide; 55½" Wide;
60½"Wide; 68½" Wide
Please specify width when ordering

Dimensional Details | media wall units

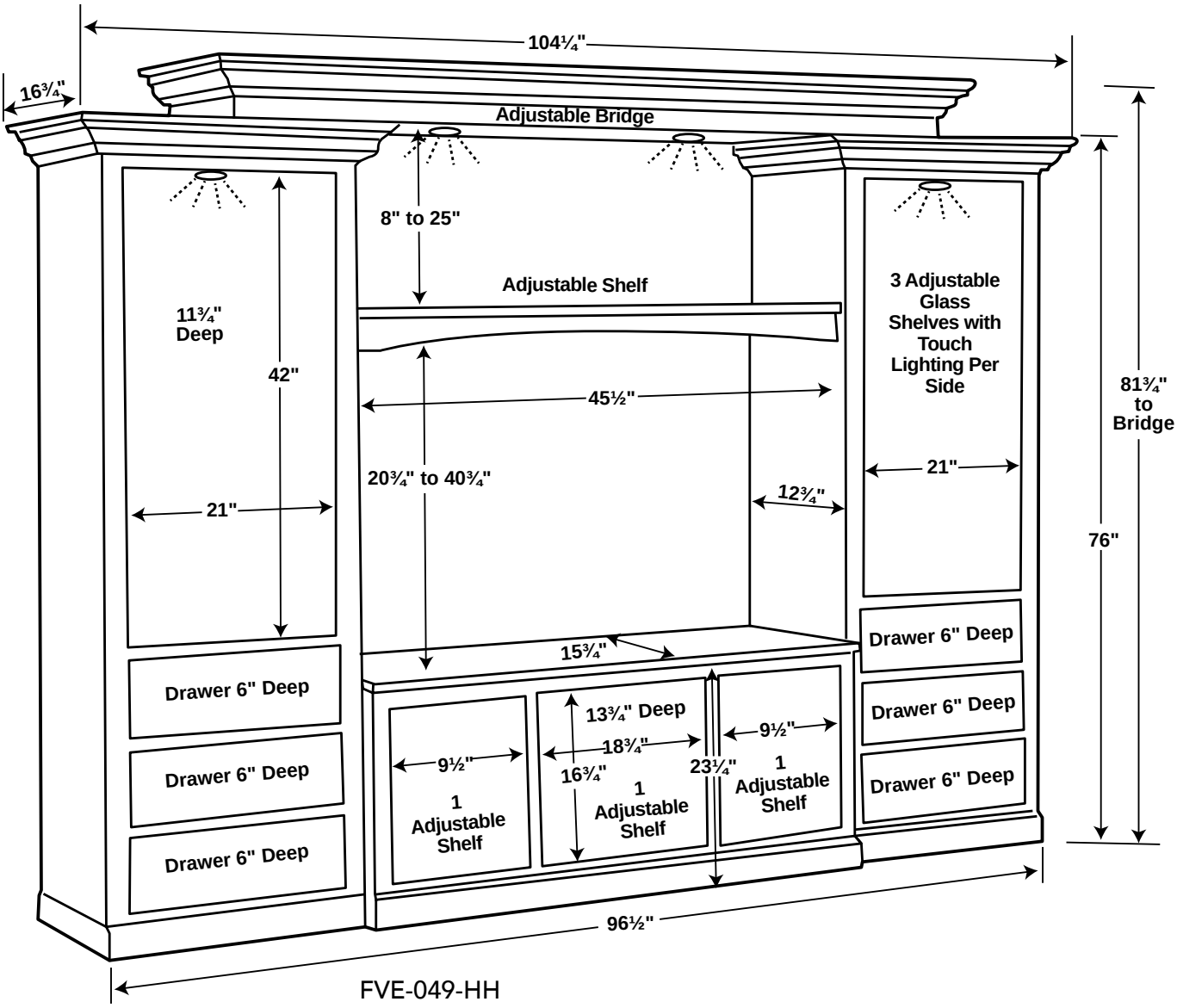

FVE-049-HH
FVE-049-MM

These overall measurements are for Manhattan Mission.
Please deduct 2¼" in width for Hoosier Heritage style

Hoosier Heritage and Manhattan Mission consoles have same dimensions
Available in 45½", 50½", 55½", 60½", 68½" wide
Height stays the same

Dimensional Details | media wall units

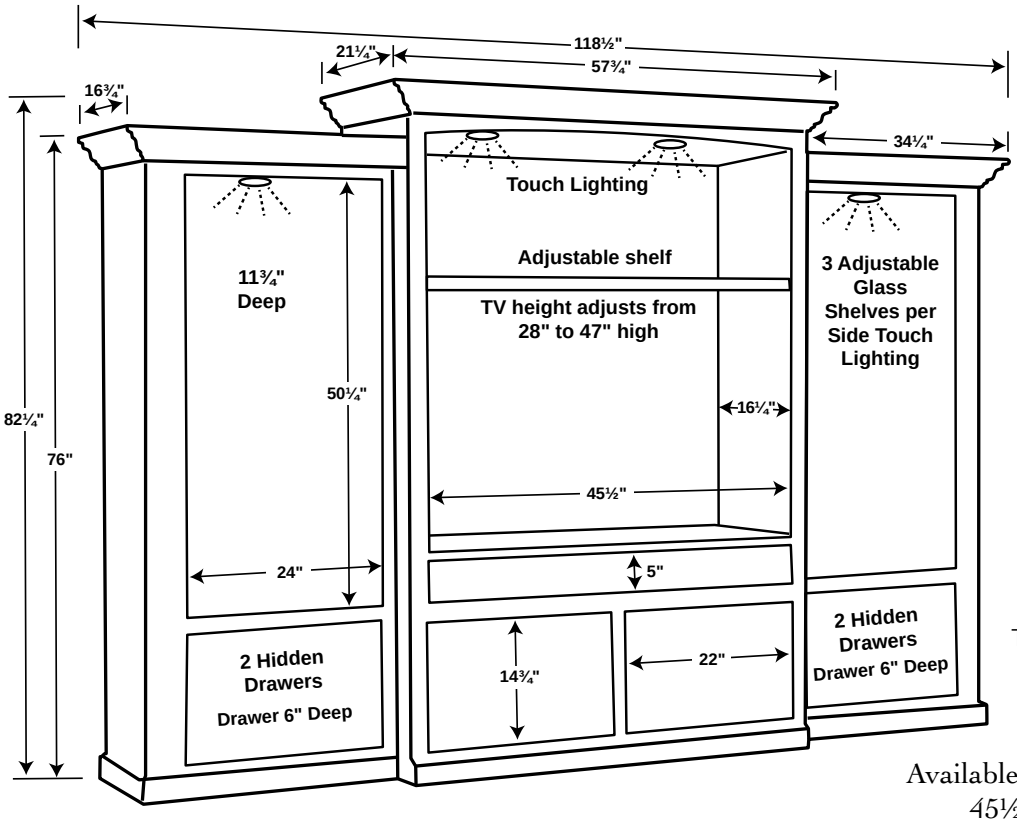

FVE-193-MM
FVE-193-VS

TV sits 26¾" off the floor
These overall measurements are for Manhattan Mission.
Please deduct 2¼" in width for Victorian style

Available in 4 different increments
45½" Wide; 50½" Wide;
55½" Wide; 60½"Wide
Please specify width when ordering

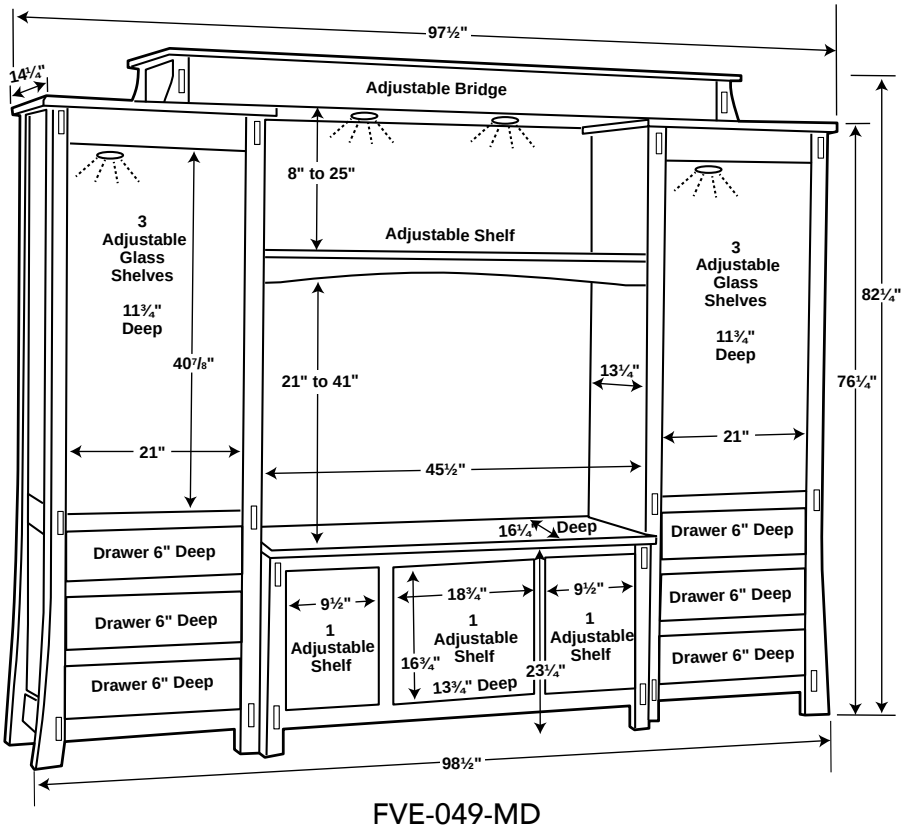

FVE-049-MD

Available in 5 different increments
45½" Wide; 50½" Wide; 55½" Wide; 60½"Wide; 68½" Wide
Please specify width when ordering

Dimensional Details | media wall units

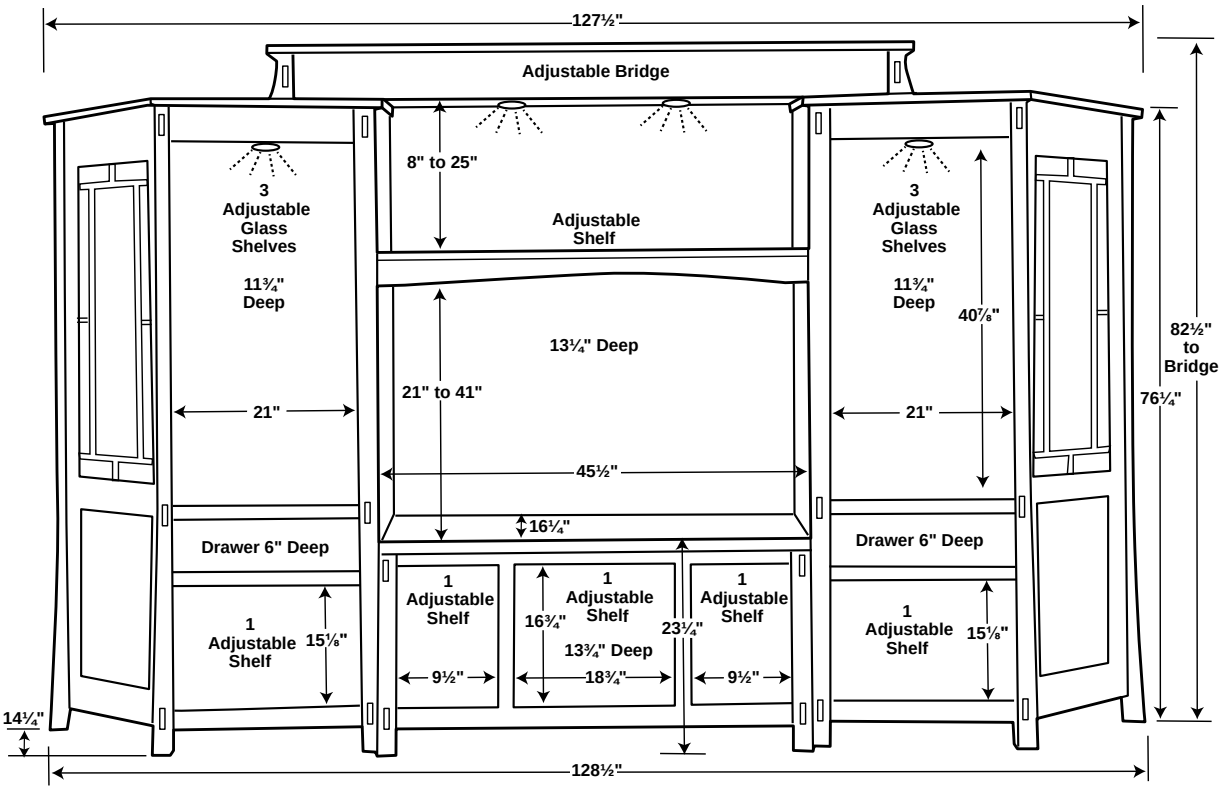

FVE-051-MD

Available in 5 increments

45½", 50½", 55½", 60½", 68½" wide – Height stays the same

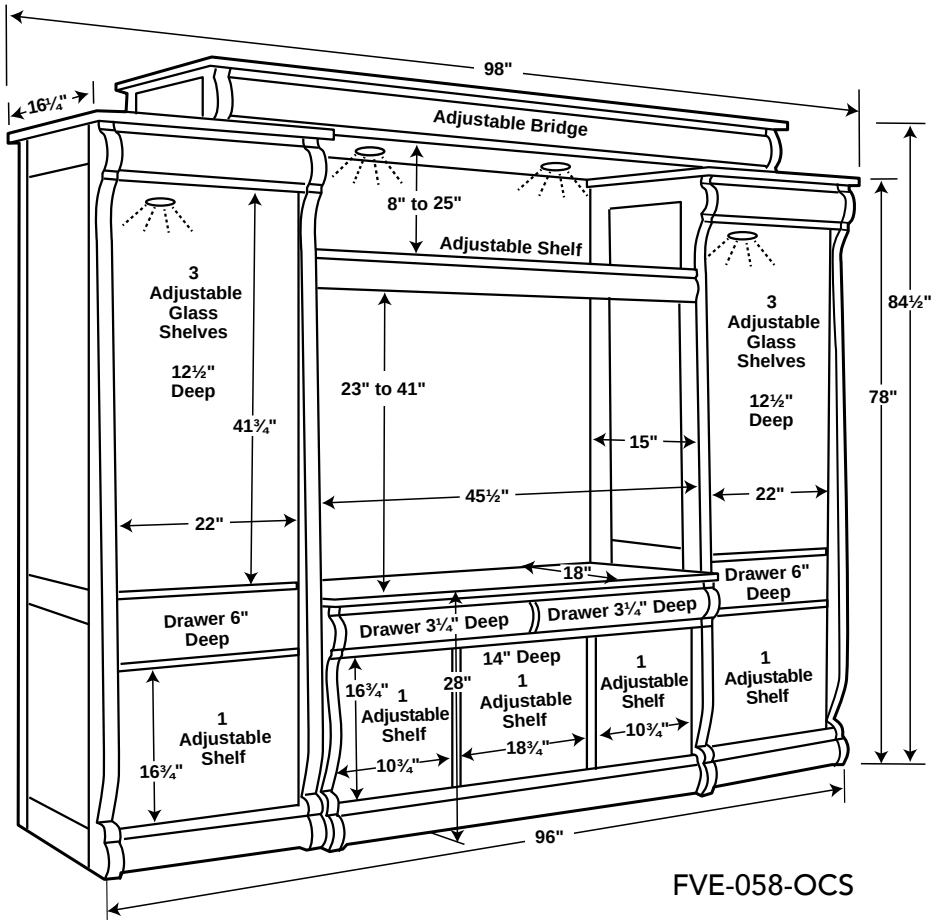

FVE-058-OCS

Dimensional Details | media wall units

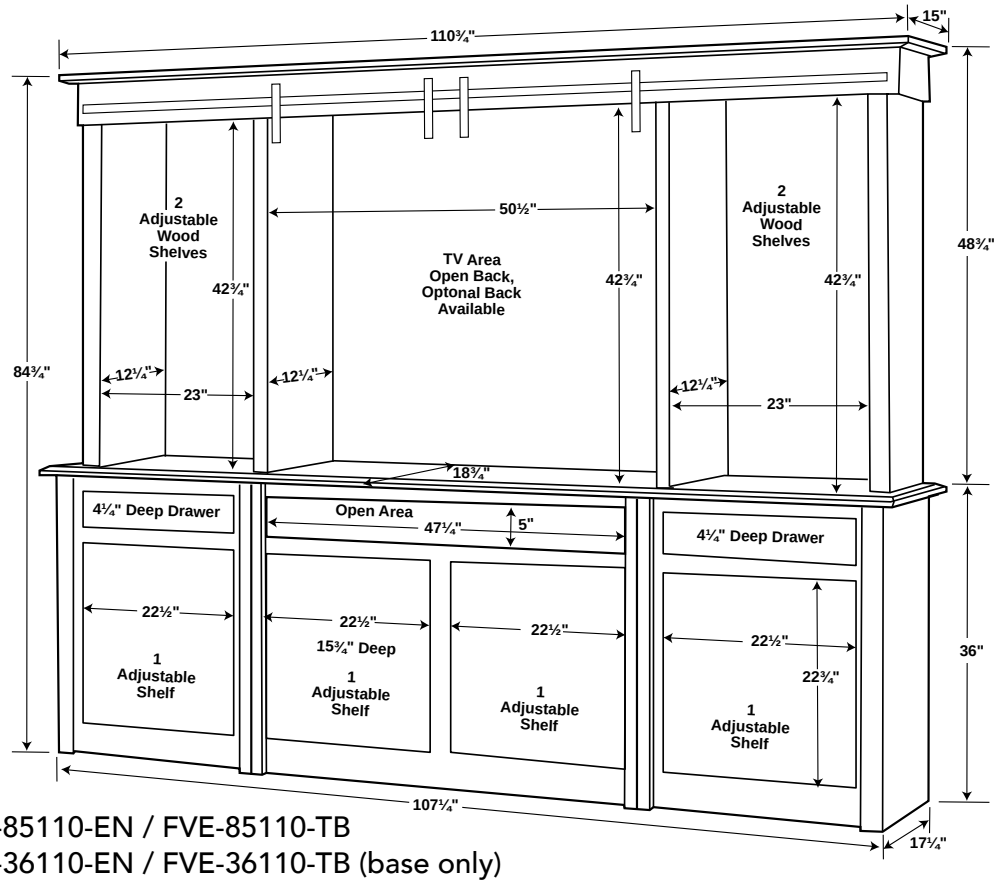

FVE-85110-EN / FVE-85110-TB
FVE-36110-EN / FVE-36110-TB (base only)

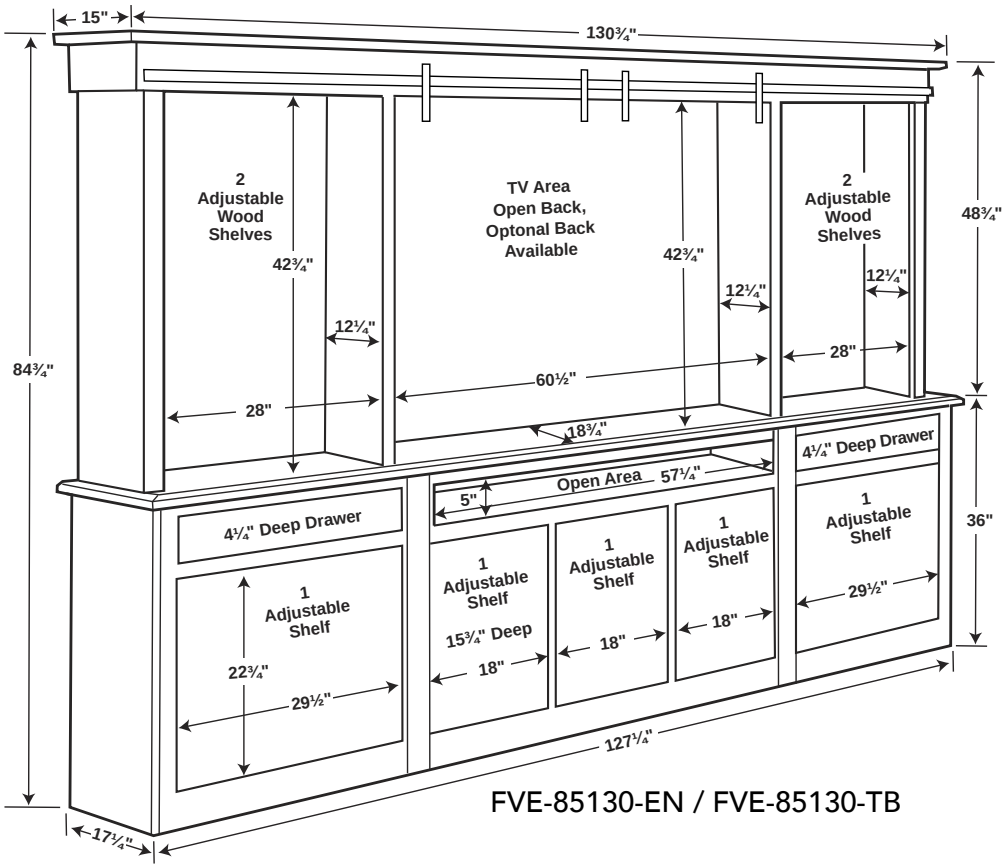

FVE-85130-EN / FVE-85130-TB

Dimensional Details | media corner consoles & hutches

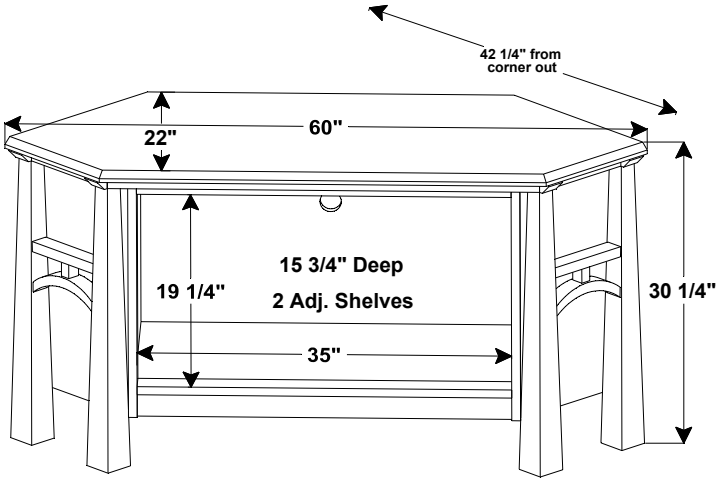

FVE-3060-A-BP

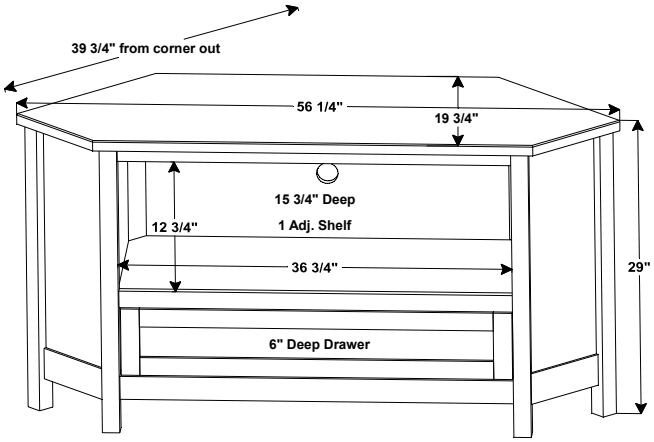

FVE-2956-BC
FVE-2956-CN

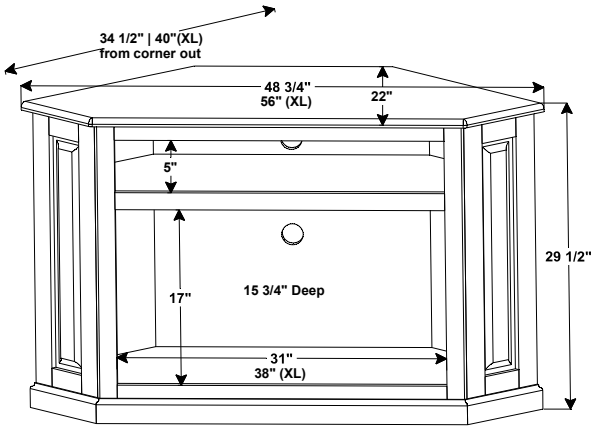

FVE-033-C, FVE-033-M,
FVE-033-CXL

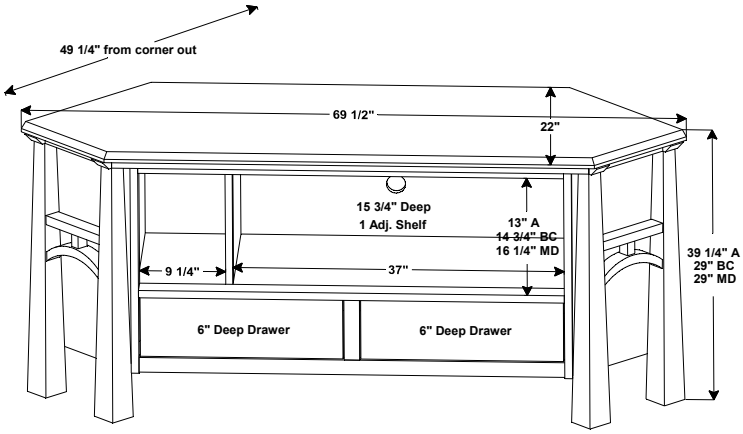

FVE-053-A-BP,
FVE-053-BC-BP,
FVE-053-MD-BP

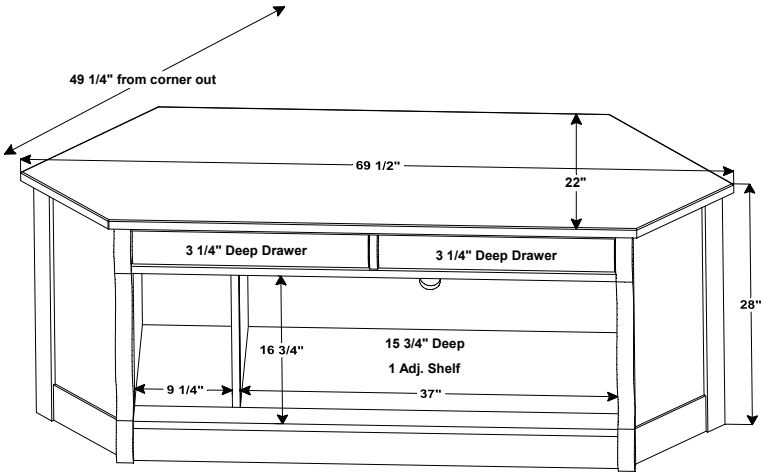

FVE-053-OCS-BP

Dimensional Details | media corner consoles & hutches

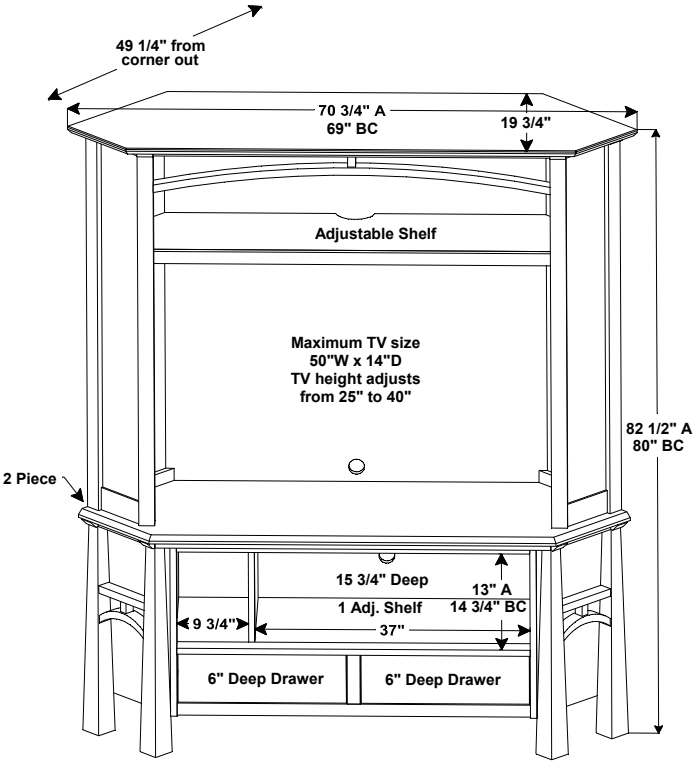

FVE-053-A
Base only 69½" W x 22" D x 30¼" H

FVE-053-BC
Base only 69½" W x 22" D x 29" H

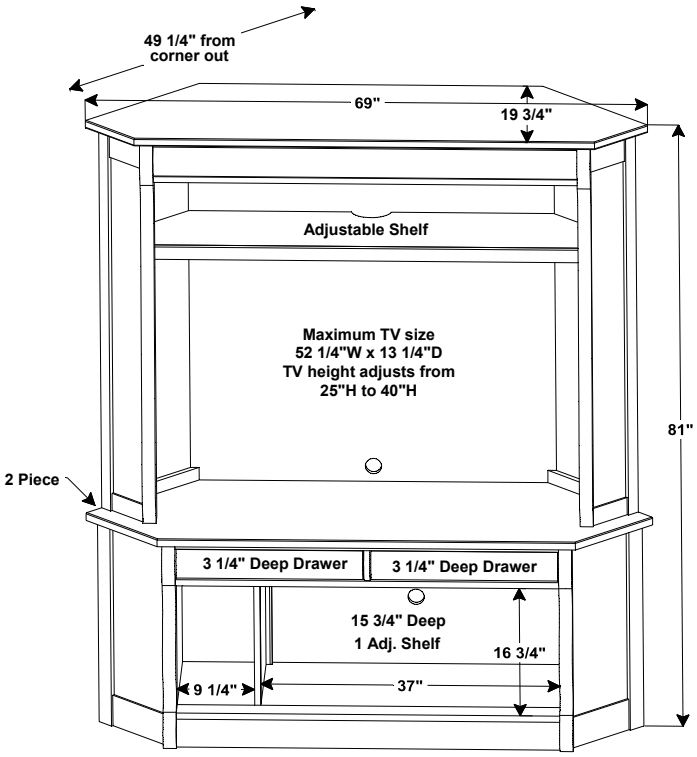

FVE-053-OCS
Base only 69½" W x 22" D x 28" H

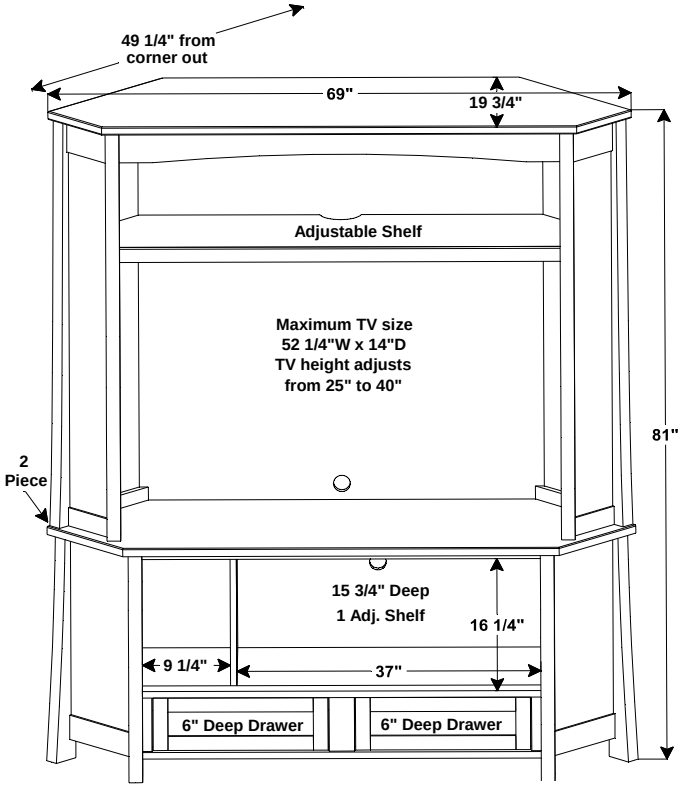

FVE-053-MD
Base only 69½" W x 22" D x 29" H

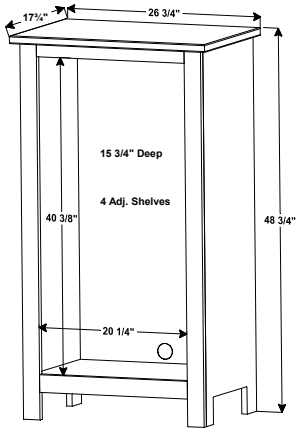

FVE-026-M

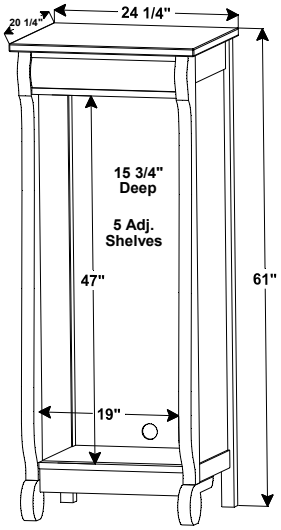

FVE-026-OCS

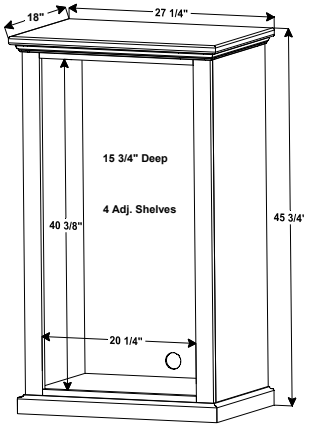

FVE-026-C

Date_____

PO#_____

Item#_____

Wood_____

Hardware_____

Notes:_____

_____

_____

_____

Customer Signature: _____

FORKS VALLEY WOODWORKING

Hand Crafted Office & Living Room Furniture

Spec Sheet for Desks

☐ Leather Inserts in Desk top

☐ Texas ☐ Black

☐ Fossil ☐ Mushroom

Options Codes

G = WG (Grommet)
P = TV 2802 (Power Station)
D = Dock-702-BK (Power Station)
C = Dock 950 (Phone Charger)

☐ **Dock-5-BK** (in kneehole area only)

☐ Left Wing (if L Desk)

☐ Right Wing (if L Desk)

☐ Left (Kneehole)

☐ Center (Kneehole)

☐ Right (Kneehole)

☐ Unfinished Back

☐ Finished Back

Width_____

Depth_____

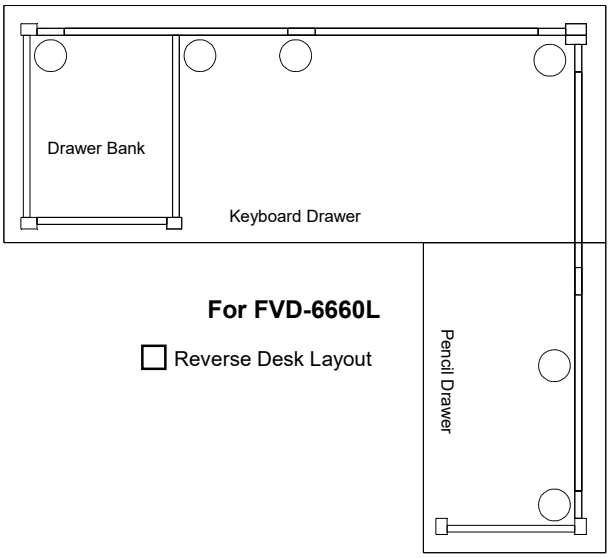

☐ Finished Back ☐ Unfinished Back

Width_____

For FVD-6660L

☐ Reverse Desk Layout

Depth_____

☐ Straight Top

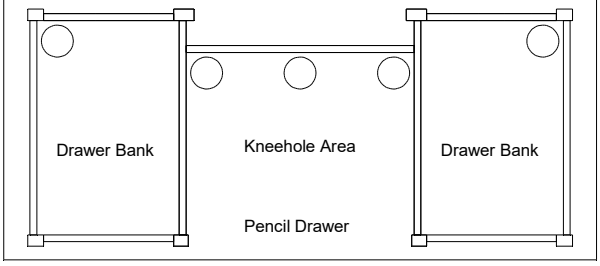

FVD-3365 and FVD-3371

No Grommets or Power Stations in Drawer Banks for FVD-3371-S/S
Keyboard Drawer on FVD-3371-S/S

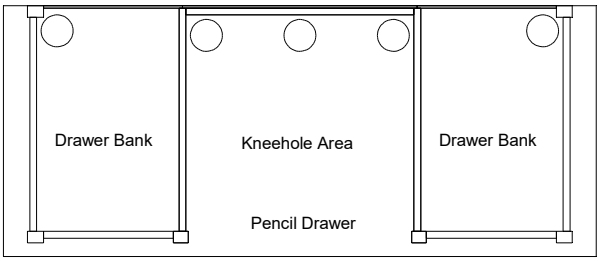

FVD-2865

☐ Unfinished Back

☐ Finished Back

Width_____

Depth_____

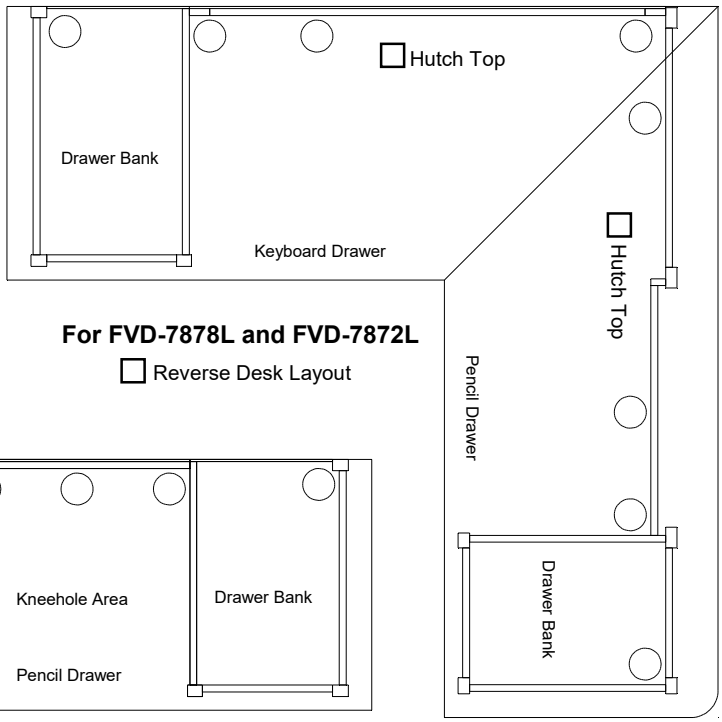

☐ Finished Back ☐ Unfinished Back

Width_____

For FVD-7878L and FVD-7872L

☐ Reverse Desk Layout

Depth_____

☐ TVSP3802-F (in back skirt board)

☐ Left ☐ Center ☐ Right

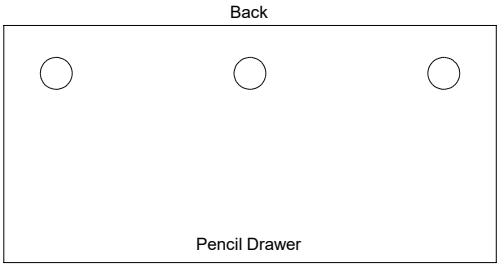

FVD-2654

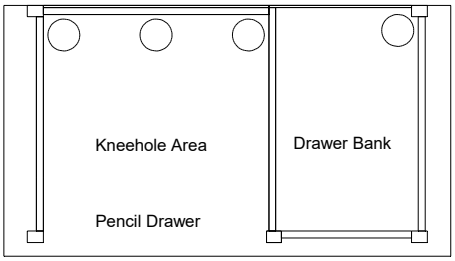

FVD-2849 and FVD-3049

☐ Reverse Desk Layout

Dimensional Details | stereo cabinets & back bar

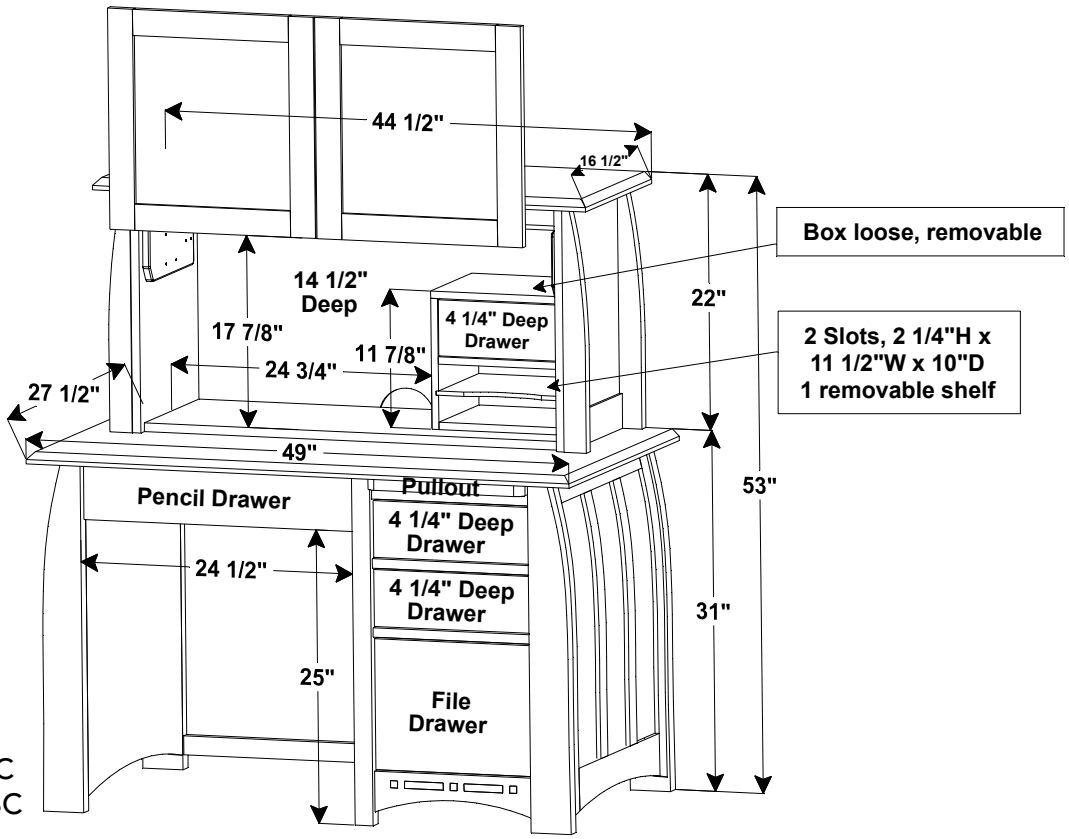

base: FVD-2849-BC
hutch: FVDH-600-BC

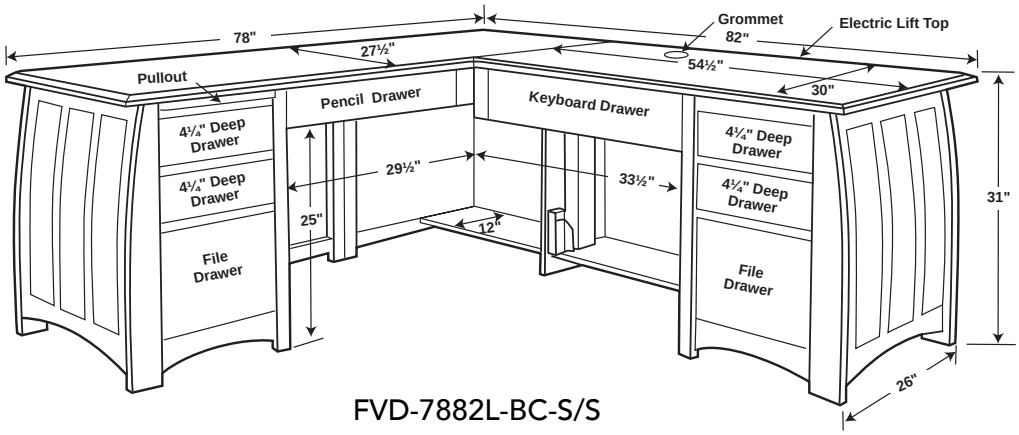

FVD-7882L-BC-S/S

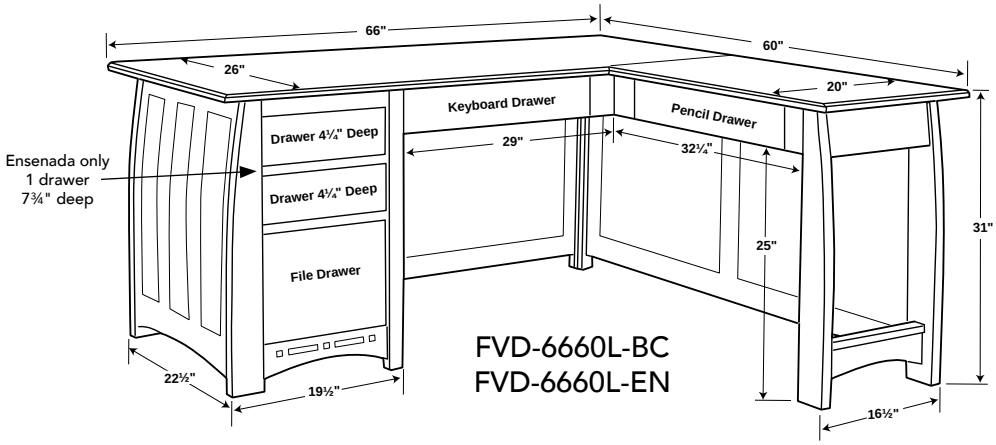

FVD-6660L-BC
FVD-6660L-EN

Dimensional Details | 2 piece desks

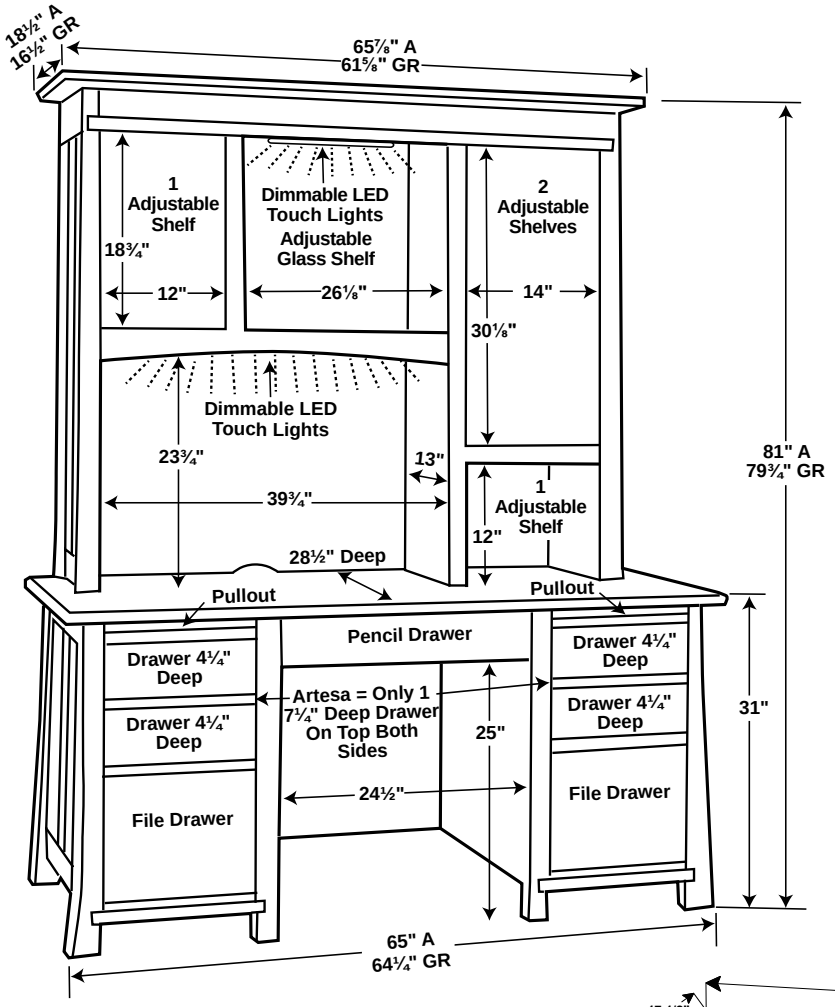

FVD-2865-HT-A
FVD-2865-HT-GR

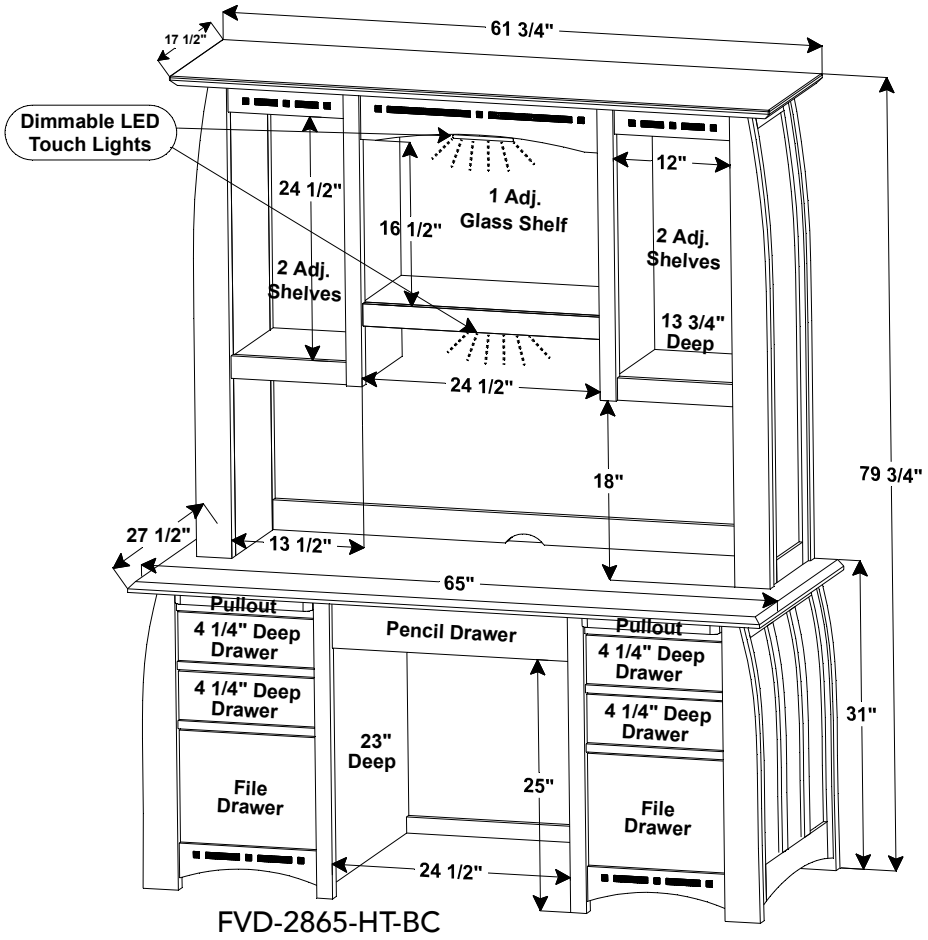

FVD-2865-HT-BC

Dimensional Details | L desks

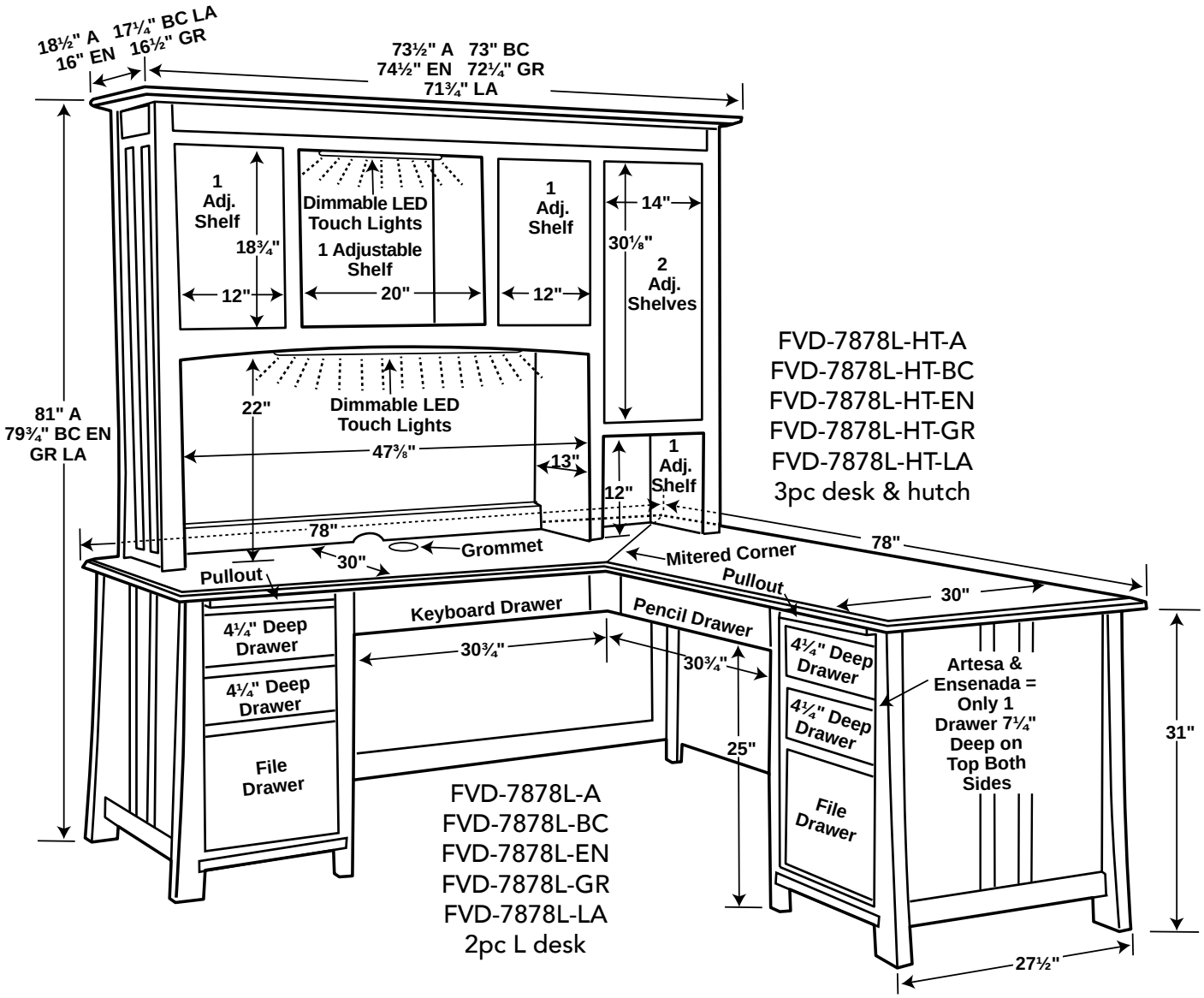

FVD-7878L-HT-A
FVD-7878L-HT-BC
FVD-7878L-HT-EN
FVD-7878L-HT-GR
FVD-7878L-HT-LA
3pc desk & hutch

FVD-7878L-A
FVD-7878L-BC
FVD-7878L-EN
FVD-7878L-GR
FVD-7878L-LA
2pc L desk

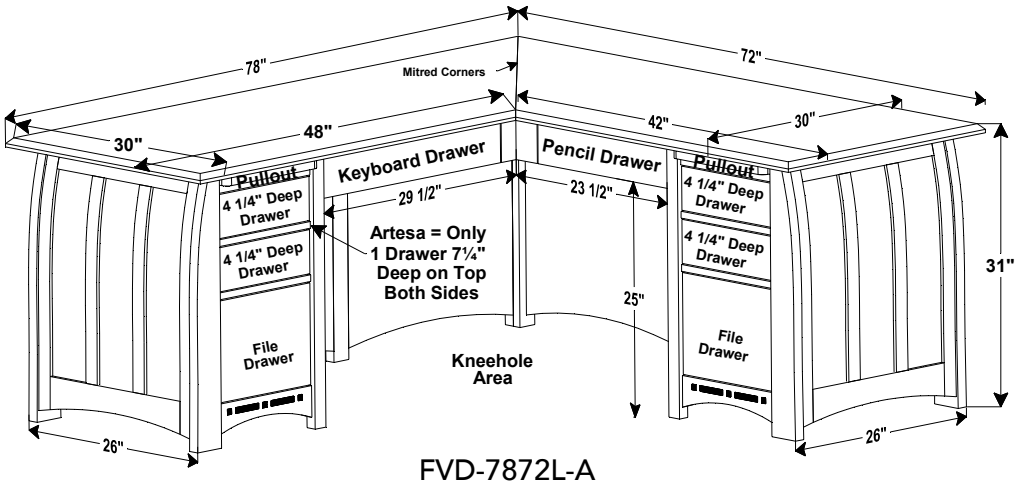

FVD-7872L-A
FVD-7872L-BC

Dimensional Details | 2 piece desks

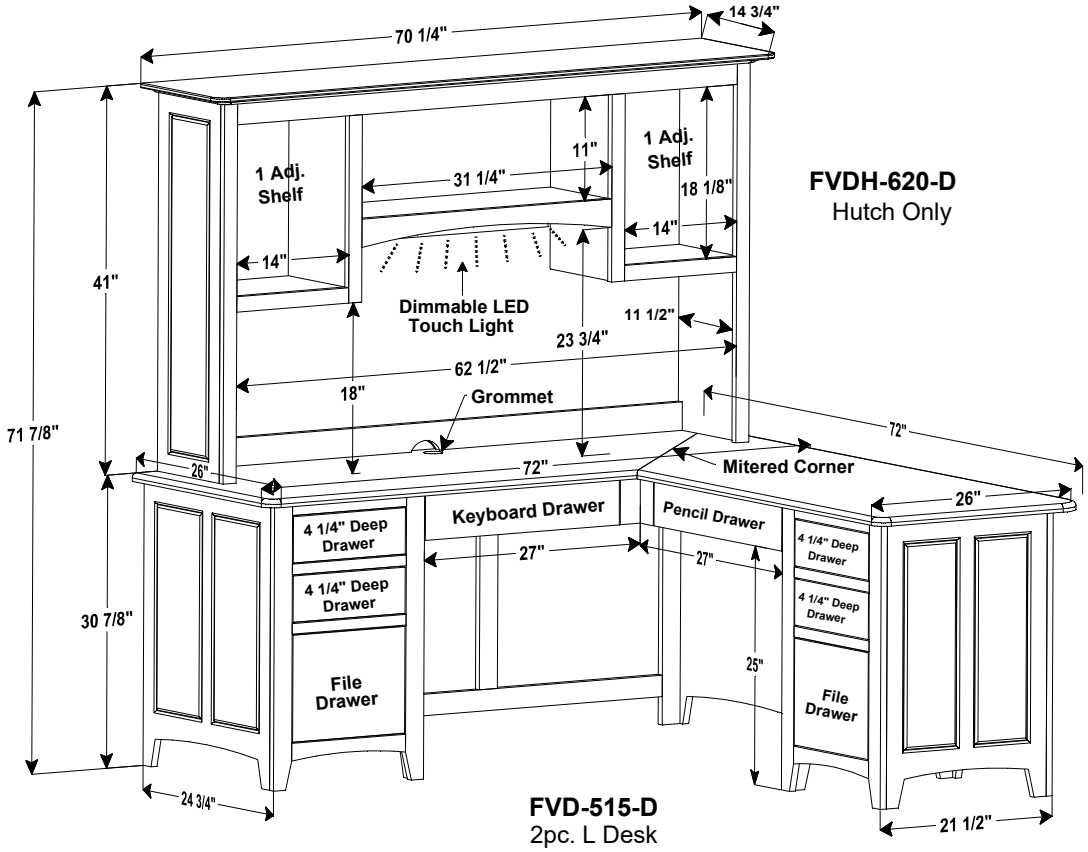

FVDH-620-D
Hutch Only

FVD-515-D
2pc. L Desk

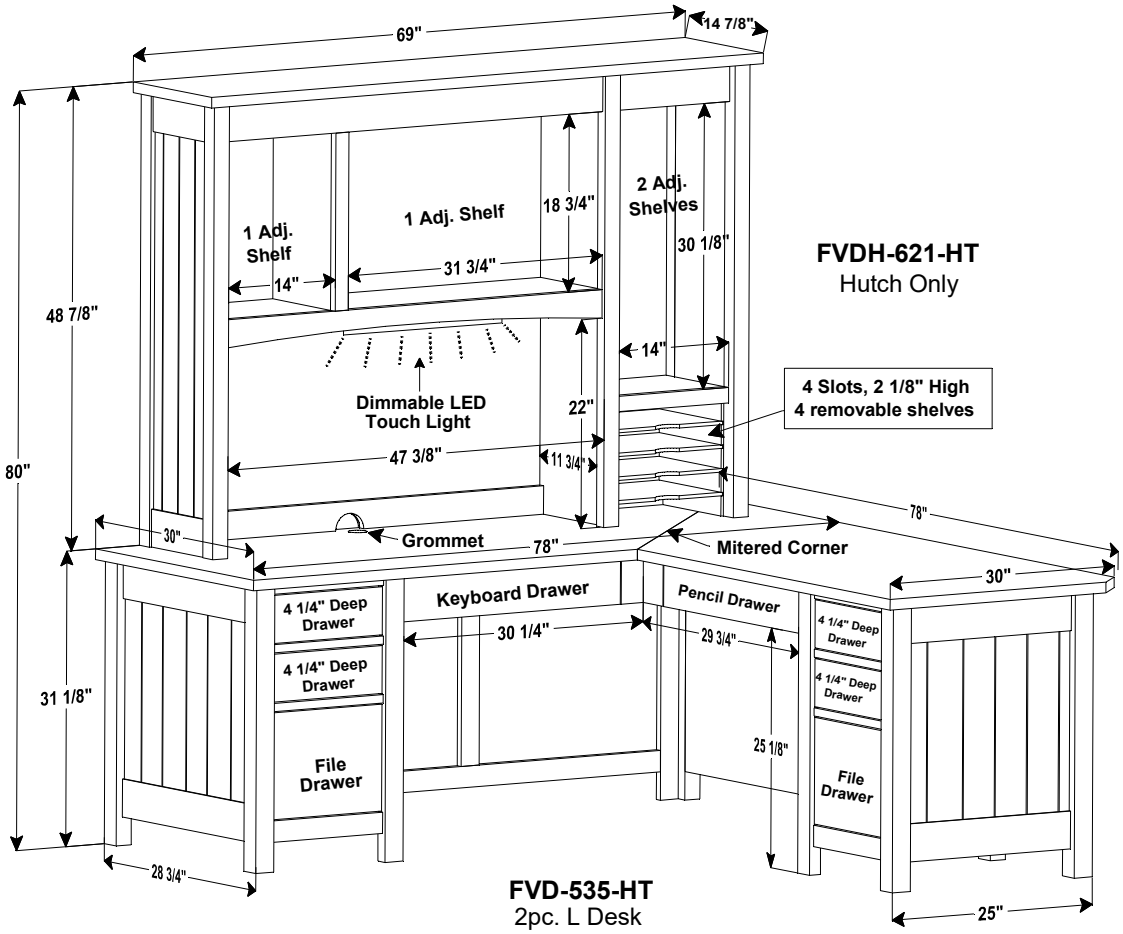

FVDH-621-HT
Hutch Only

FVD-535-HT
2pc. L Desk

Dimensional Details | L desks

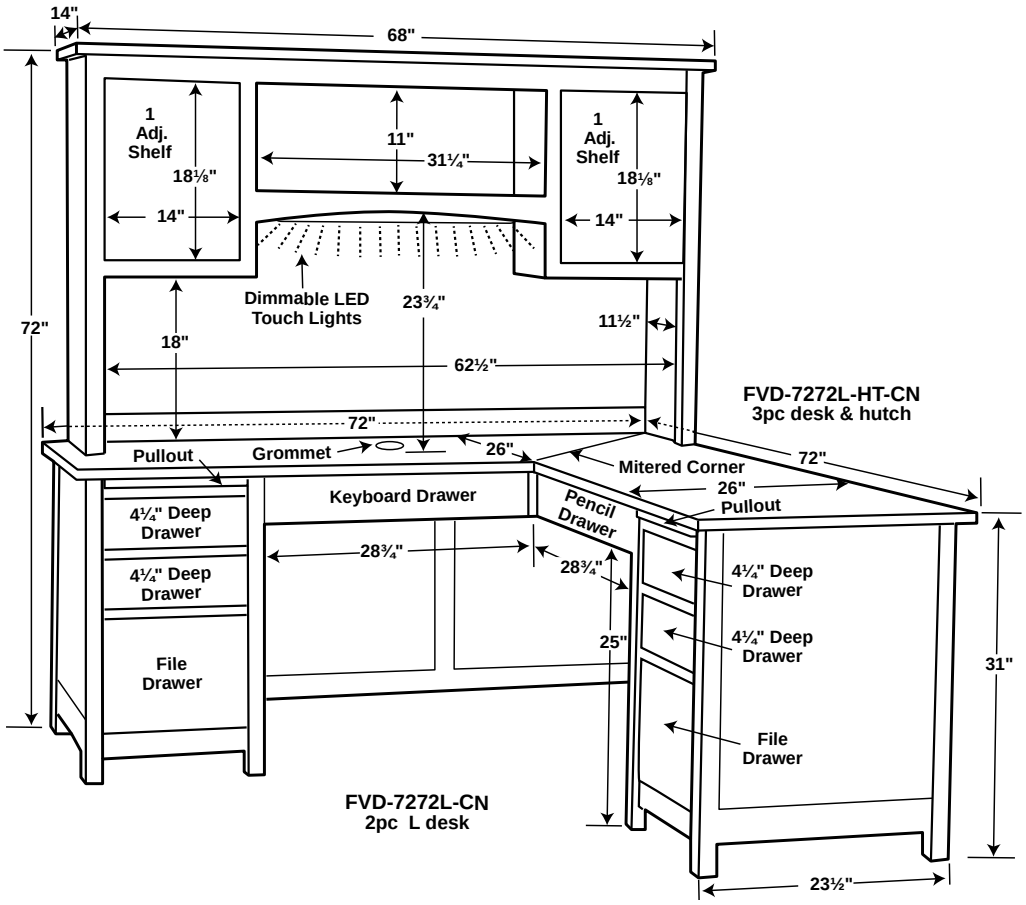

FVD-7272L-HT-CN
3pc desk & hutch

FVD-7272L-CN
2pc L desk

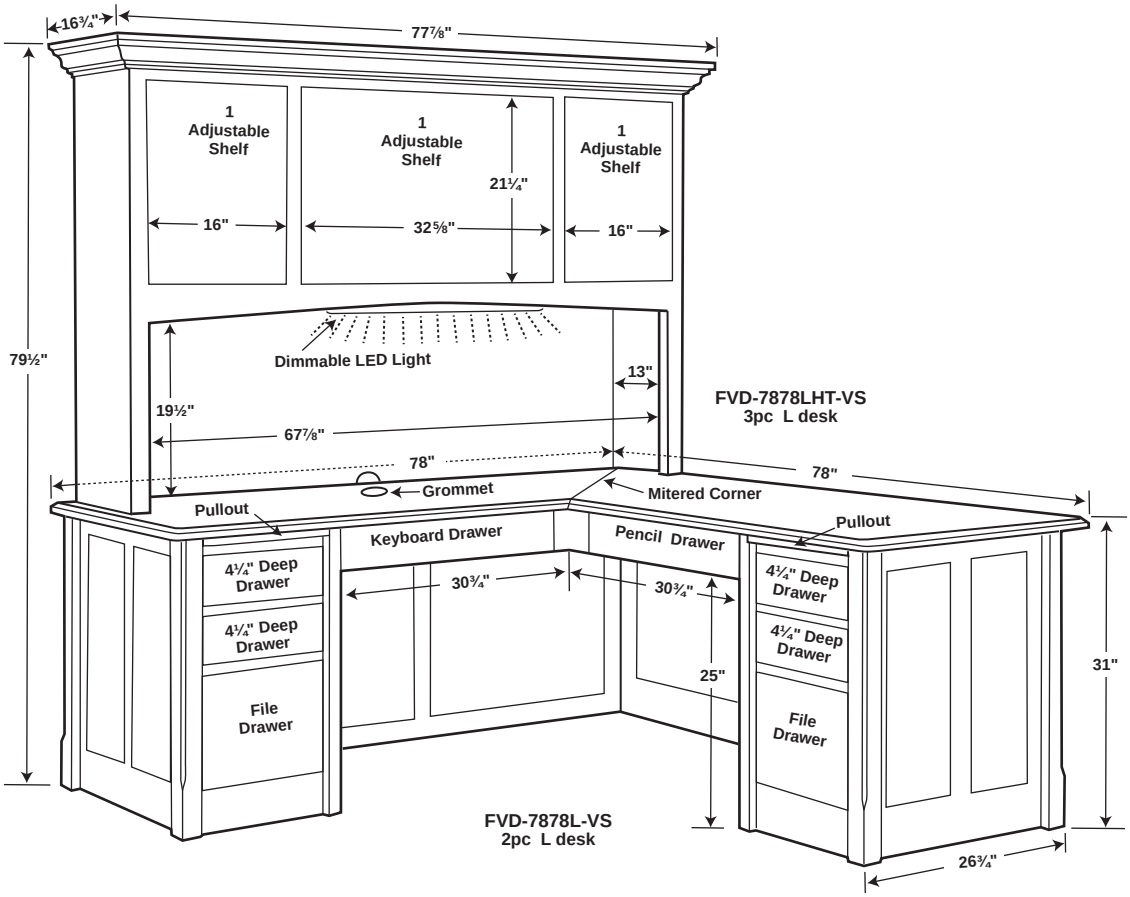

FVD-7878LHT-VS
3pc L desk

FVD-7878L-VS
2pc L desk

Dimensional Details | L desk & 4 piece desk

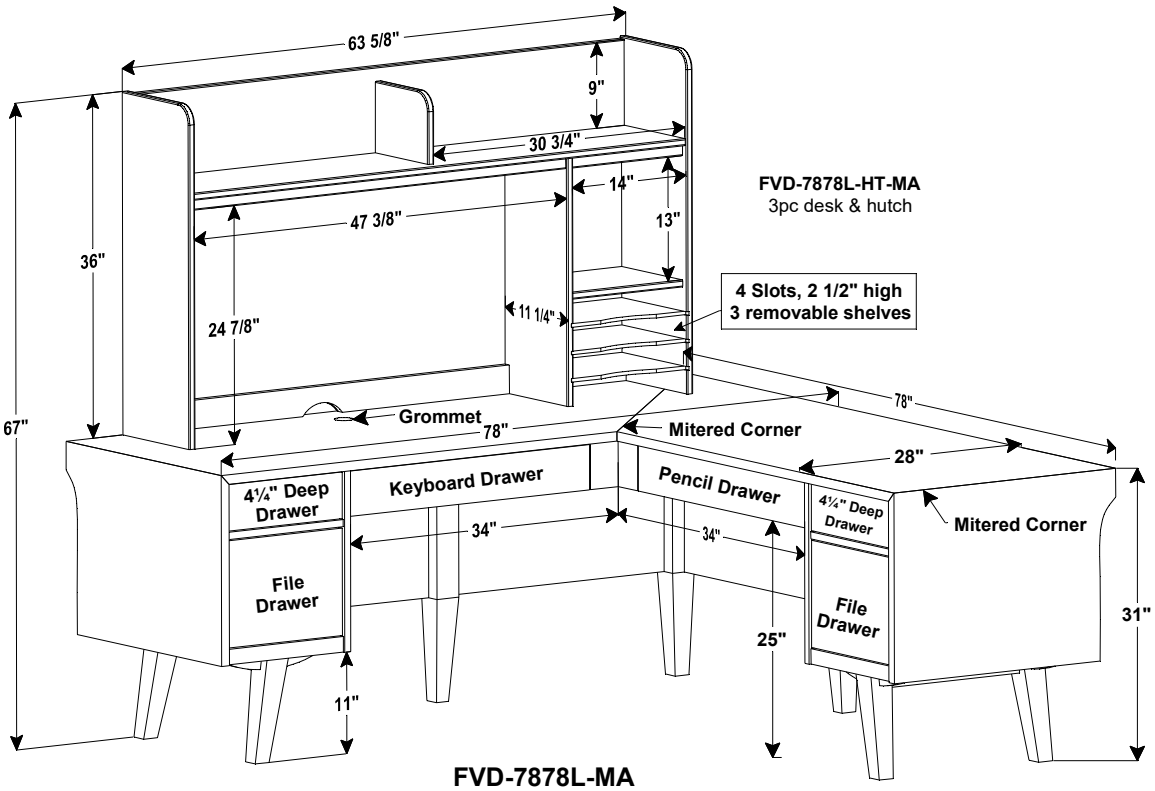

FVD-7878L-HT-MA
3pc desk & hutch

FVD-7878L-MA
2pc L desk

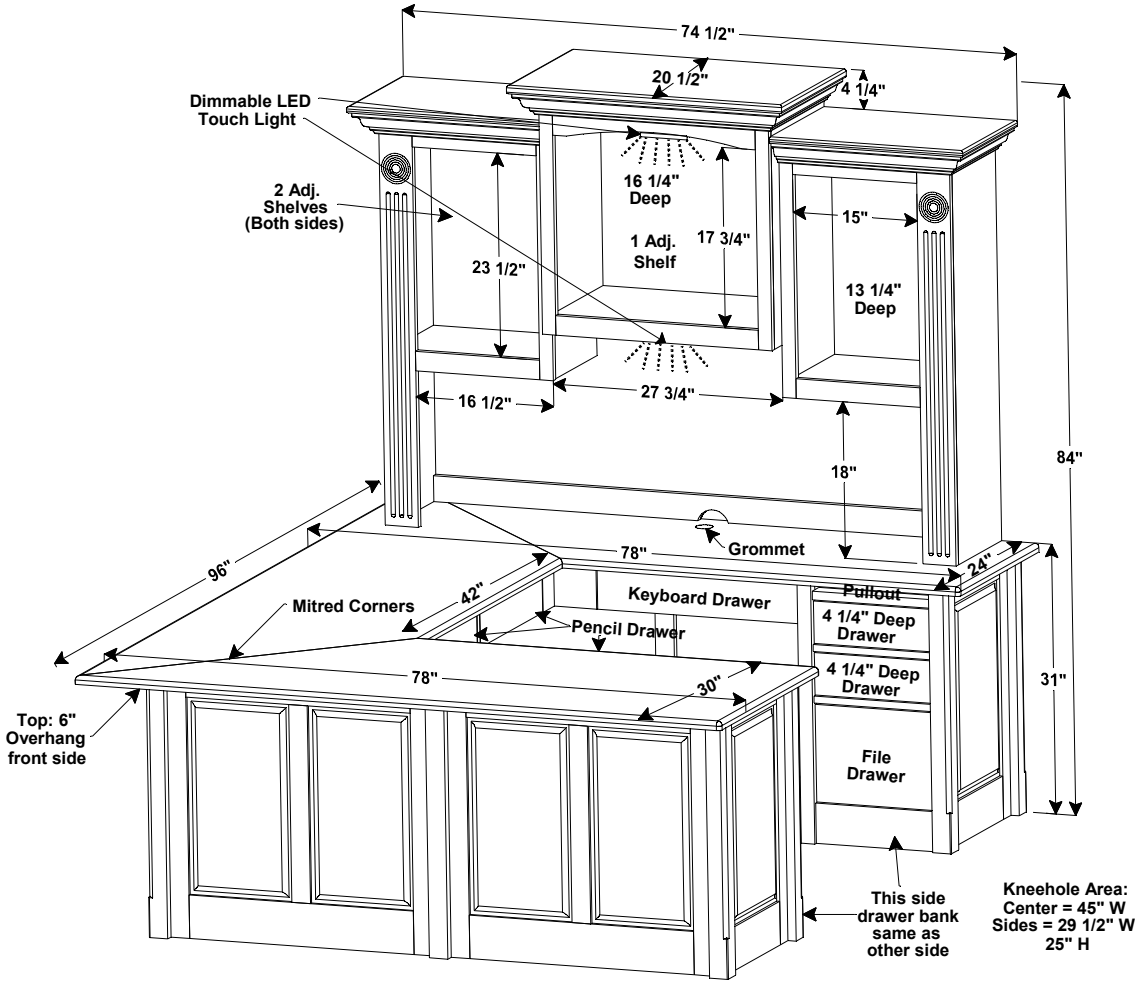

FVD-9678U-HT-VS

Dimensional Details | back bars

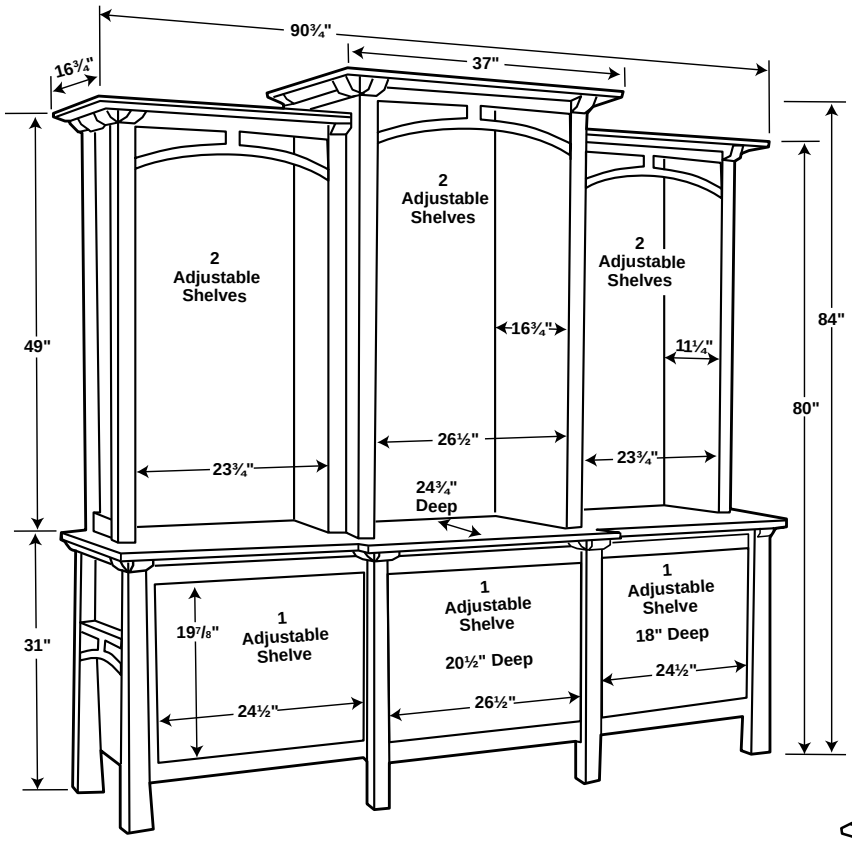

FVBB-2590-HT-A

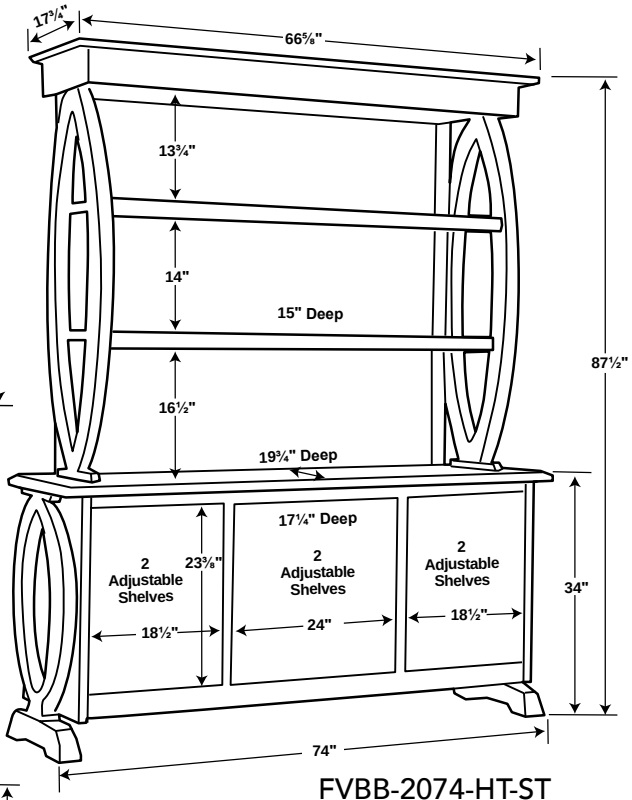

FVBB-2074-HT-ST

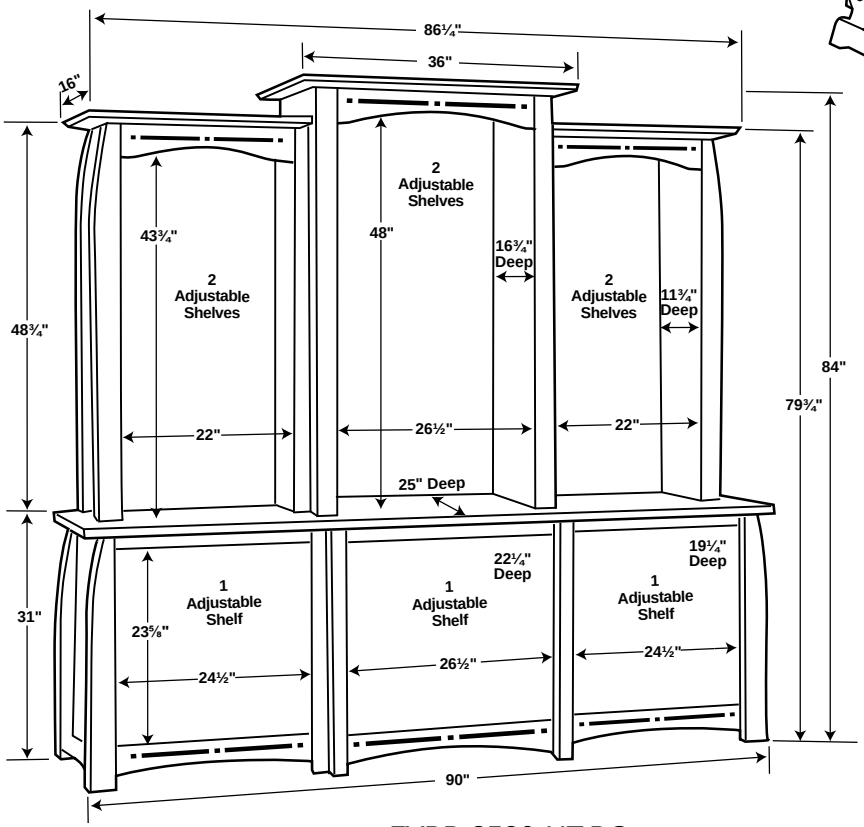

FVBB-2590-HT-BC

LIMITED WARRANTY

Forks Valley Woodworking will honor limited warranty to the original owner of the furniture against any manufacturing defects for the following:

- 5 years on cracks in wood parts, providing the customer has between 35%-45% humidity-controlled environment.
- 3 years on metal parts and mechanical mechanisms (desk lifts)
- 2 years on electrical components (desk lifts, lighting, etc.)

FORKS VALLEY
WOODWORKING

© 2025 Forks Valley Woodworking